C.D 127
12 JUL 1962

REPORT

of

The Syllabus Committee

on the

Training of Rural Artisans

in the

Community Development Blocks

JANUARY 1960

PART I

सत्यमेव जयते

MINISTRY OF
COMMUNITY DEVELOPMENT & COOPERATION
(Department of Community Development)
GOVERNMENT OF INDIA

CONTENTS

	Page
Chapter I	
1. Introduction	1
2. Appointment of the Committee	1
3. Working of the Committee	2
4. Members co-opted	3
5. Acknowledgements	3
6. Interim Report	3
7. Syllabii	4
8. The Contents of the Report	4
Chapter II — *Findings*	
1. The need for trained craftsmen in the C.D. Blocks	7
2. Existing Training facilities	8
3. Defects of the existing types of training centres	9
Chapter III — *Recommendations*	
1. The type of training required	13
2. Selection of trades for training	14
3. Organisational pattern of the training centres	14
4. Rationalization of the training programmes	16
5. Permanency of the training centres	17
6. Central organisation for coordination	17
7. Syllabus of training	17
8. Location of training centres	18
9. Selection of trainees	18
10. The size of the training centres	19
11. Age limit and qualifications of trainees	19
12. Duration of training	20
13. Hours of work	20
14. Workshop, class rooms etc.	21
15. Hostel accommodation	21
16. Stipends and prizes	21
17. Periodical progress test	21
18. Issue of certificates to successful trainees	22
19. Supervision and inspection	22
20. Delegation of powers	22
21. Supply of raw materials for training	23
22. Teaching Staff	23
23. Qualifications of the teaching staff	24
24. Training of Instructors	24
25. Follow up	24
Summary of Recommendations	27
Annexure I	35
,, II	39
,, III	40
,, IV	49
,, V	57

CHAPTER I

INTRODUCTION

The Development Commissioners' Conference on Community Development held at Mussoorie from 26th to 30th April, 1957, expressed dis-satisfaction with the manner in which training schemes of the rural artisans in the Community Development Blocks were being implemented. It was generally felt that the training programmes were not producing the desired results and a recommendation was made for an investigation and re-organisation.

The question of the training of rural artisans was again discussed at a meeting of the representatives of the Ministry of Community Development and Cooperation, Ministry of Home Affairs, Ministry of Labour and Employment and the Ministry of Commerce and Industry on 14-5-1958.

This meeting endorsed the views expressed at the Conference of the Development Commissioners and recommended that a special Committee called the "Syllabus Committee" should be jointly formed by the Ministry of Labour and Employment, the Ministry of Commerce and Industry and the Ministry of Community Development to examine the training programmes for rural artisans in the Community Development Blocks to draw up syllabii for the different trades and to make recommendations with a view to making these schemes purposeful and effective. The minutes of this meeting are given at Appendix 1.

2. Appointment of the Committee

The Ministry of Community Development and Cooperation under its O.M. No. 31(64)/57-TG, dated 7-11-1958, appointed the "Syllabus Committee" with the following :—

1. Shri P. Rajnath, Director (Training), Ministry of Labour and Employment, New Delhi.	Chairman
2. Shri K. L. Nanjappa, Development Officer, Small Scale Industries Board, New Delhi. (Later on Director of Small Industries Service Institute, Government of India, Bangalore)	Member
3. Shri A. D. Bohra, Director (PTC), National Small Industries Corp., New Delhi ..	"
4. Shri Dhirubhai Desai, Director (Training), Khadi & Village Industries Commission, Bombay	"
5. Shri P. M. Mathai, Director of Industries, Ministry of Community Development and Cooperation, New Delhi..	"

6. Shri P. S. Nadkarni, Deputy Director (Industries), Directorate of Cottage Industries, Poona .. .. Member
7. Shri V. Padmanabhan, Deputy Director, Village Industries, Madras .. .. .. ,,
8. Shri J. P. Govil, Joint Director of Industries, Meerut. [Later on District Magistrate, Bijnor, (U.P.)] .. .. ,,
9. Shri S. P. Dutta, Deputy Director, Technical Education, Jodhpur .. .. ,,
10. Shri Amirullah Khan, Deputy Director, A.I. Handicrafts Board.
    Replaced by:—
    Shri P. L. Sethi, Deputy Director, All India Handicrafts Board, New Delhi.. .. .. ,,
11. Shri A. Sarkar, Deputy Director (Industries), Cooperation, New Delhi .. .. .. Member Secy.

This Committee was given authority to co-opt experts to help in its work.

The terms of reference of the Committee were as below:—

(*i*) The Committee will draw up and recommend a syllabus for each of the various rural industries which are important for development in Community Development Blocks.

(*ii*) The Committee will recommend a follow-up programme for establishing artisans who will undergo training in these rural artisans training centres in their respective trades in the villages.

(*iii*) The Committee will also recommend any measures to be undertaken to make the rural artisans training programme in the Blocks purposeful and effective.

(*iv*) The recommendations of the Syllabus Committee will be referred to the Ministry of Community Development for final decision in consultation with the Ministry of Labour and Employment and the Ministry of Commerce and Industry.

3. Working of the Committee

With a view to obtain first hand information and have a correct assessment of the problem, the Members of the Committee visited a number of Training Centres in the Community Development Blocks, studied the working of the Centres and held discussions with the representatives of the State Departments concerned. The Committee held four meetings in Delhi on the following dates:—

First meeting	.. 5th & 6th December, 1958.
Second meeting	.. 3rd & 4th March, 1959.
Third meeting	.. 5th & 6th November, 1959.
Fourth meeting	.. 27th January, 1960.

Reference', has covered practically all aspects of craftsmen training in rural areas. It has necessitated a great deal of investigation in the field and a detailed study of the problems facing the States in the implementation of training schemes, besides preparation of suitable syllabii to meet the special needs of rural artisans.

The Committee submitted an Interim Report to the Ministry of Community Development and Cooperation in April, 1959 broadly indicating the steps to be taken for achieving improvements in training programmes for rural artisans. Copies of the Interim Report were circulated to the different State Governments and Ministries as well as to the All India Boards and the Khadi and Village Industries Commission for comments and suggestions.

Most of the State Governments, from whom replies have been received, have generally accepted the recommendations made in the Interim Report. The concerned All India Boards and the Khadi and Village Industries Commission, have also agreed with the recommendations. The views and comments of all these bodies have been summarised in Annexure III of the report.

7. Syllabii

In view of the poor standard of general education and the lack of any appreciable technical background of the Instructors, the Committee decided that the syllabii and equipment lists for different trades should be drawn up in the greatest possible detail. It was considered desirable that very little should be left to the imagination of the Instructors and detailed instructions should be given in such a progressive manner that even Instructors with little education and meagre experience in teaching may be able to implement the course. For this purpose, a sample syllabus (*vide* Annexure IV) was obtained by the Committee and issued for guidance to the different persons responsible for drawing up the syllabii. The committee felt that it would be desirable in the circumstances, to get outside experts with wide experience in the trade and some teaching knowledge to prepare the detailed syllabii on the lines desired by the Committee.

The difficulty in obtaining the desired syllabii and equipment list resulted in considerable delay in the preparation of this report. The Committee has perforce decided that instead of waiting for all the syllabii to be prepared on the lines desired, the Report now should be submitted with the syllabii which the Committee has so far been able to obtain. Some of the syllabii have been drawn out in the manner desired and appear to meet requirements; others need very much to be desired. The Committee would like the different agencies implementing the schemes to continue efforts to get these syllabii which are not to the desired pattern, suitably enlarged and modified till all the syllabii have been brought upto the desired standard.

8. The Contents of the Report

The report consists of two parts. Part—I comprises the findings and recommendations of the Committee and Part—II contains the syllabii. At Annexure II is given a list of trades for which syllabii have been obtained.

———

PART I

THE FINDINGS AND RECOMMENDATIONS

CHAPTER II

FINDINGS

1. The Need for Trained Craftsmen in the C.D. Blocks

As is well known, there are in the Villages craftsmen engaged in various trades who have been carrying on their work, for generations with varying degrees of skill in the traditional methods and techniques used by their fore-fathers. The tools and equipment used and the techniques applied, in most cases are obsolete and inefficient according to modern standards. Although there is no denying the fact that they have latent talent and can easily adopt new and modern methods, these men have not had the opportunity to acquire adequate skills, knowledge of the techniques of the trades, their market conditions and the suitability of the raw materials for the job etc. to enable them to satisfy the demands which are now springing up in the village communities. The introduction of improved methods of agriculture and minor irrigational practices, the programmes of development of small scale and village industries and various other developmental activities like rural housing, have tended to go a long way in bringing about a rapid and appreciable change in the pattern of demand of both capital and consumer goods in the rural areas. By way of example, it may be stated that the improved plough, the seed drill, the thresher, the weeder, new irrigational equipment, simple structural hardware, bee-keeping equipment, handloom accessories, model ghanis, improved chakkies, winnowing fans, ambar charkhas, improved potters' wheels, moulds for bricks and tiles, sheet metal wares, improved furniture, better earthen wares, smokeless chulhas, village earthen refrigerators, village type of sanitary latrines, etc. are some of the items for which there has been a growing demand in the villages. The existing craftsmen with traditional skills and techniques find it difficult to manufacture or maintain them. In the course of visits to training centres in community development blocks, the members were informed that craftsmen for doing minor repairs and servicing of the irrigation pumps and other improved agricultural equipment have to be obtained from cities, sometimes long distance away from rural areas. It was also reported that Ambar Charkhas and other items of improved equipment for rural industries, lay idle for considerable periods as trained men to maintain and service them were not available in the blocks. The developmental activities in the rural areas are thus creating opportunities for additional as well as increasingly remunerative employment. With the impact of the Five Year Plans and the gradual breaking up of the insularities between the cities and the rural areas on account of increasing rail and road transport, there has been a general improvement in the living conditions of the villages which has resulted in a demand for wider and improved variety of consumer goods.

It has, therefore, become a matter of importance and urgency to make available adequate training facilities comprising improved techniques and skills as well as more modern tools and machines to

both old and young; particularly the younger generation, to enable them to meet the changing rural demands and to better their economic conditions.

One of the objects of the community development programme is to create opportunities for employment for the villagers nearer their homes in rural areas. The importation of personnel or better goods and services from outside to meet the rural requirements which can be supplied by the village craftsmen themselves, if they are trained for the purpose, cuts across this object.

The Committee has, therefore, been led to the irresistible conclusion that the existing village craftsmen and other villagers having aptitudes for crafts, particularly sons of artisans should be given the required training on sound lines and in an effective manner. Indeed, the Committee on Plan Projects have very aptly stated that "training will for many years form a very large part of the working for promoting rural industries."

2. Existing Training Facilities

The training facilities, at present, available in the community development blocks may be broadly divided into three categories *i.e.*,

(*i*) *Training centres*—Institutional training centres started for imparting training in basic skills in new crafts or the traditional old crafts.

(*ii*) *Training*-cum-*production centres*—These have the same object as (i) above, but the production aspect on a commercial basis is, as far as possible, also given emphasis.

(*iii*) *Peripatetic centres*—These comprise demonstration parties and mobile vans for improving the existing skills and techniques by demonstrations and personal training guidance for upgrading the skills.

In spite of efforts, it has not been possible to collect reliable information about the particulars and the exact number of training centres of various categories which have been started in the different blocks. From the report available with the Ministry of Community Development and Cooperation, it was estimated that nearly 3,000 training units on a temporary basis were started in about 1,000 blocks by end of the year 1957. But in pursuance of the decisions of the meeting referred to in paragraph 3 under introduction in Chapter I, the State Governments were asked to reorganise those training-*cum*-production centres. Besides, the training programmes undertaken in Blocks, the Khadi and Village Industries Commission and the various All India Boards have also been financing certain programmes some of which are located in the rural areas. Some of the State Governments are also running their training centres out of their own resources.

As regards the programme financed through Small Scale Industries Organisation, the training centres are by and large located in urban areas. In case of Khadi and Village Industries, although an attempt has been made to provide training facilities for traditional

industries which fall under their jurisdiction, it is reported that the size of the effort has been small. As regards handicrafts, the State Governments have been given financial assistance for setting up a number of training centres and also training-*cum*-production centres like weaving of artistic fabrics, fancy leather goods, wooden toys, dolls, ivory carvings, etc., but these have been generally located in urban areas where the traditional handicrafts still exist. The Handloom Board normally does not provide finance for training new weavers. However, assistance is being given by the Board for the training of the existing weavers in the use of improved appliances, pattern making and dyeing. In certain States, the Central Silk Board has been financing training programmes for improving existing practices through their demonstration farms, nurseries and training-*cum*-production centres etc. A small number of training-*cum*-production centres in coir products have also been started in a few States.

3. Defects of the Existing Types of Training Centres

In course of visits to training centres of different categories in the States, the members of the Committee carried out on the spot study in the various aspects of the training programmes. The Committee obtained the views of the different State Governments and other agencies in the schemes through the Ministry of Community Development and Cooperation by means of circular letters etc. Copies of the existing syllabii for training in different trades in a number of States were obtained and studied. After all this study and discussion, the Committee considers that the various defects and handicaps in the training programmes can be briefly summarised as given below:—

(*i*) *Temporary Institutional training centres.*—In these temporary centres, training is given on basic principles and basic operations. The trainees are taught the theory connected with the trade in addition to its technique and a syllabus of a sort has been laid down. It is felt, however, that this type of training can be effective only if there is adequate equipment and efficient guidance from experienced staff. The actual fact, however, is that most of these Institutions are inadequately equipped and poorly manned and the training being given is of too theoretical character to be generally understood and imbibed by craftsmen and trainees and not generally in accordance with requirements. There are also no adequate arrangements for the assessment of the training being given. Because of the temporary nature of the job and the poor scales of pay offered, good and capable instructors are rarely attracted and those who come forward have seldom any experience of rural requirements. The result is that the trainees after they come out of these centres, can hardly make a living by working in these trades.

? (*ii*) *Training*-cum-*production centres.*—The training-*cum*-production centres were started as it was felt, that they combined the advantages of Institutional training in basic skills with those of apprenticeship in the trade and it was hoped

that these would overcome the disadvantages of the theoretical nature of the training being given in the Institutional Training Centres. These training-*cum*-production centres have been organised to give training in two stages. The first stage is the regular institutional training in the technique and theory of the trade and in the second stage production on a commercial scale is undertaken under the guidance of skilled artisans or instructors. Experience with these also has not been satisfactory. In fact, it has been found that most of the training-*cum*-production centres have failed to obtain the desired results on account of a number of defects. For example, institutions burdened with the responsibility of giving effective training have not been able to give equal emphasis to the commercial aspect of production and there has been a tendency to shift operational losses on the commercial side of production to the training side by bolstering up accounts and stock-in-trade with a view to maintain appearances.

(iii) *Peripatetic parties.*—The peripatetic parties have not made appreciable progress because of the various general drawbacks, such as lack of suitable machinery to follow-up the training and the failure to obtain improved and increased production from the trainees. The length and quality of upgrading required and the duration of the training are not fixed in advance. No assessment of the actual requirements is generally carried out. In case of mobile vans in the rural areas for demonstration of improved machines and techniques people mostly gather to satisfy their curiosity. The equipment fitted is not always according to the needs of the crafts of the area.

(iv) *Follow-up programmes.*—The position in regard to the follow-up programme is no better. Systematic programmes for settling the trained artisans in trades with financial, organisational and marketing assistance together with arrangements for giving further follow-up technical guidance in the day-to-day problems of productive activities are lacking. For obvious reasons, the training centres are not able to actively help the ex-trainees in obtaining gainful employment nor does there appear to be other satisfactory arrangements to follow up the career of these persons. It has, indeed, been very aptly stated in the report of the Committee on Plan Projects (Report of the team for the study of Community Projects & National Extension Service) that more than 50 per cent of the persons passing out of such training centres do not take up the trade to which they have been trained.

(v) *Lack of coordination between different agencies.*—In the course of study, the Committee observed that a number of agencies were running the training centres in the States. Some were being run from the provisions made in the block budgets for arts and crafts while others by the funds provided by the All India Boards, the Khadi and Village Indus-

tries Commission and the Ministry of Home Affairs for the Welfare of Scheduled Tribes and Castes as well as by other Ministries. In some blocks, there is a number of State Departments which are running their own training centres. The Committee found that there was a multiplicity of agencies working with funds obtained from different sources and without very much effective coordination.

(*vi*) *Other defects.*—In addition to the above, there are other defects in the working of the training programmes. These are given below :—

(1) The training centres are generally ill-equipped. Improved equipment supplied to some of the training centres had been allowed to lie unused for long period due to the lack of knowledge and interest of both the instructors and the management.

(2) A majority of the Instructors do not possess the required technical qualifications and to make matters worse have not the experience required for this type of training.

(3) The pay scale of Rs. 70 to Rs. 100 per month fixed for this category of staff in most of the States is too low to attract the right type of persons.

(4) Most of the training centres have been run as purely temporary establishments. The temporary nature of the job offered to the Instructors has militated against attracting better types of Instructors.

(5) Most of the Instructors have had no training in teaching methods.

(6) Most of the trainees were observed to be small boys and were not able to imbibe finer points of training.

(7) The young trainees appear to be more lured by the stipends than by any genuine desire to learn the trade. This is especially found to be common amongst trainees selected from non-artisan families.

(8) The rate of stipend at present given generally varies from Rs. 10 to Rs. 15 per month in most of the cases. The low rate of stipend does not attract the grown-ups or older members from artisan families for acquiring an improved skill, the advantage of which cannot be easily foreseen by these persons. They are able to earn very much more with the existing traditional background of the trade.

(9) The selection of the trainees and the allotment of the trainees to each trade, in a number of cases, had no relation to the needs of those areas.

(10) There seems to be no upper or lower limit to the size of the training centres. The number of trainees generally varies from 10 to 20 per training centre. Similarly, there appears to be no uniformity in regard to the pattern of organisation. In most of the training centres, there are

only one or two Instructors, the second being called an assistant instructor or helper and the strength of the Instructors appeared to have no relation to the number of trainees under training.

(11) Similarly, the working hours and the period of the training in the same trade vary from place to place. For instance, in some training centres, the period for training for blacksmiths is six months and in other places, it is found to be 12 months.

(12) The syllabii according to which instruction is given are in a majority of cases, no more than list of mere headings of the broad contents of training. The lesson notes, the drawing up of the practical and theoretical courses during the period of training are all left to the initiative of the Instructors who themselves did not appear to know very much. With this low standard of Instructors, any success in the training being given to the trainees can hardly be expected.

(13) Payment of stipend, in most cases, is not made to the trainees regularly and on any fixed date.

(14) The procurement and stocking of the raw material for training is being done haphazardly. There seems to be no specification laid down, in most cases, for the raw materials to be provided for training.

(15) The Committee observed that about 20 per cent of the trainees abandon their course before completion. The main reasons seem to be the improper selection of the trainees, the unsatisfactory training being given and irregularity in regard to the payment of stipend.

(16) There seems to be no direction from the top in most of the training institutes and supervision is found to be very lax.

Chapter III

RECOMMENDATIONS

After a very careful on-the-spot study of a number of training centres in the different States and as a result of the discussions with the State officials and the persons actually implementing the scheme, it is our considered opinion that the training centres established in the community development blocks have not produced the desired results. They have not helped much in either producing new craftsmen with the desired skill nor have they been successful in upgrading the existing skill of the craftsmen to any appreciable degree.

We, therefore, feel that a stage has been reached when a comprehensive and a thorough overhaul of all the training schemes should be undertaken on a realistic basis, with a view to producing rural artisans for meeting the requirements of the expanding development programmes of rural industrialisation.

There is no doubt that the successful implementation of these schemes will bring economic improvement in the conditions of the craftsmen as well as in increased production of new goods and better maintenance and fuller use of the existing means of production.

1. The Type of Training Required

1.1. We consider that the type of training required for the rural artisans will have to be different from the training being given for the artisans for organised urban industry. While a craftsmen for organised industry is generally required to possess a high degree of specialised manufacturing skill in someone trade, the rural craftsmen, on the other hand, require diversified skills in a number of allied trades. In addition they should possess operative as well as organisational knowledge to be able to meet rural demands.

1.2. The training should be closely related to the demands, of the village communities and emphasis should be laid on improving the skill of the traditional artisans by improvements in their existing techniques, skills and equipment to meet the demands of the village community for the various capital and consumer goods as well as for servicing and repairing the new and/or improved equipment being introduced rather than on starting institutions with any new concepts of workshop or equipment or methods of training on the lines of those obtaining in organised industry.

1.3. It will, however, be necessary to also create a new set of skilled craftsmen of young persons with initiative in the villages who can produce new types of goods and can service and repair, the village equipment by adapting the equipment and the skills of the organised urban industry with required adjustment to meet the needs of the village conditions and the needs of the expanding rural industries.

1.4. We, therefore, recommend that there should be rural artisan training centres of the two types given below :—

(i) Institutional training centres which give training in the various improved techniques for attainment of the requisite skill in the trades required for enabling the trainees to take up the trade as an independent profession, or on organised basis in village cooperatives.

(ii) Mobile training parties and centres for upgrading the existing skill of the craftsmen amongst concentrations of artisans in the villages.

2. Selection of Trades for Training

2.1. We feel that the greatest care should be taken in the selection of a particular trade for introduction at a training institution. It is essential that a careful survey of the area should be carried out to assess the requirements of the trained artisans on a long term as well as on a short term basis in the light of industrial development programmes in the immediate as well as the adjoining blocks on a more or less zonal basis. Care should be taken to avoid duplication and any severe competition.

2.2. After careful consideration we recommend 26 crafts of which a list is enclosed. These crafts have been selected as the raw materials for them are locally available, and/or there is a growing need of capital and consumer goods which can be produced by the craftsmen in these trades. Also, generally the availability of a number of craftsmen and a favourable climate in these trades which are pursued in one area or the other should be considered. This list is not meant to be exhaustive, new or traditional trades which have potentiality of development should be selected and added according to the programmes of development of the State Governments and the needs of the area. In selecting the 26 crafts, we have also taken into consideration the fact that electricity will not be available in the large majority of the villages for some time to come.

3. Organisational Pattern of the Training Centres

3.1. We consider that while the greatest effort should be made to reorganise and remodel the existing training centres on realistic lines and to furnish them with proper equipment and with capable and trained Instructors, new centres for new trades should only be opened where there is a felt need for artisans.

3.2. We recommend that normally 4 trades should be clustered together in one institutional training centre and this centre should normally cater to the needs of 4 to 5 blocks. The "cluster" type of institutional training centre should, in our opinion be the standard pattern so far as institutional training is concerned. An approximate estimate of running a cluster type of institutional training centre for one year including its cost of housing and hostel accommodation for trainees is indicated at Annexure V. Total expenditure during the first year including the cost of land and buildings and hostel accommodation is expected to be of the order of Rs. 1.59 lakhs. The recurring expenditure for one year will be approximately Rs. 46,000.

3.3. While standardising the 'cluster' type of institutional training centre, we appreciate that this should not be made rigid standard to be applied everywhere. A centain amount of flexibility should be given so that the special requirements of training of a particular area may be fully satisfied.

We are glad to note that the Government of U.P. have already started reorganising their own training centres on the pattern of the 'cluster' type of training centres and are avoiding rigidity in this scheme by maintaining some existing centres where training is being given in only one or two trades to meet the special requirements of the blocks in which they are situated. We also note that the Government of Assam has started a 'cluster' type of training centre with 4 trades and has provided hostel accommodation to the trainees in their pilot project for industries in Darrang. We are also happy to note that the Working Group appointed by the Government of Mysore to review the working of the rural craftsmen training schemes has recommended reorganization of the existing training centres on the lines of the "cluster" type of training centres and the State Government is following up the recommendations.

3.4. In regard to the mobile centres or parties for upgrading the skill of the trades, we recommend that there should be extension wings of the institutional type of training centres. These will go to the areas in the blocks having concentration of traditional artisans who are not able to go to the institutional training centres, which may be at a long distance, and for other reasons. These mobile parties will concentrate on the improvement and upgrading of the traditional skill of the craftsmen by staying for a reasonable length of time at each place. The type of training and the period of stay will depend on requirements. It will be necessary that a certain amount of advance propaganda and publicity is carried out in the area before a mobile party reaches there.

3.5. It may also be necessary to bring a few artisans from the concentrations to the institutional training centres for a short period of intensive course of training for upgrading their skill and technical efficiency on special machines and tools and improved methods of production. This will help to publicise the scheme and also create good-will and interest amongst the artisan class.

3.6. Besides running the peripatetic training parties for upgrading the traditional skill as extension wings of the 'cluster' type of institutional training centre, we also recommend that peripatetic training parties or mobile training units may also be formed for those trades which cannot, generally be located in the 'cluster' type of institutional training centre, *i.e.*, palm gur making, khandsari, flaying etc. etc. Out of the selected list of 26 trades, those which should be included in the cluster type of institutional training centre with extension wings and those for which purely peripatetic or mobile training is suitable have been indicated as per Annexure VI.

3.7. We do not recommend opening up of new training-*cum*-production centres in rural areas either for imparting new skills or for upgrading the skill of the traditional artisans, in view of their general

failure in producing the desired results. Wherever such training-*cum*-production centres exist, we recommend that the production part of it, if economically sound, should be completely separated from the training part with separate staff and supervision although both the wings may temporarily remain under the same roof and the trainees from the training centre may find employment in the production centre.

4. Rationalization of the Training Programmes

4.1. As we have stated previously, there are far too many agencies at the State as well as the Central level who are associated with the training craftsmen in the country. We have already suggested an organisational pattern for the training of rural artisans and we recommend that the administration of training for the rural artisans should be vested in one agency at the State level. In our opinion, with the rationalisation of the training programmes, the tendency to start a large number of rural training centres, as at present exist, will be curbed and the time will soon come for re-organising training programme in a smaller number of well-equipped and well-manned training centres of the 'cluster type'.

4.2. We have given careful consideration to the utilisation of the training facilities existing with the various agencies and the following recommendations are made in respect of each of them:—

(a) *The Ministry of Labour and Employment.*—This Ministry has a number of Industrial Training Institutes administered by the State Governments for training craftsmen. Though these institutions are fairly well equipped and organised, they are meant specifically for training craftsmen for organised industry and we are of the opinion that they are not suitable for the training of rural artisans. The requirements of rural artisans to work as self employed or on organised basis through cooperatives or other types of artisans' organisations within the rural areas, are entirely different and we, therefore, do not consider the training centres of the Labour and Employment Ministry suitable for our purpose.

(b) *Central Silk Board and All India Handloom Board.*—Some of the State Governments are running training centres in sericulture and handloom weaving in some cases from financial help from these two Boards and it is expected that these training centres will be integrated with the 'cluster' type of training centres when the State Governments have implemented their reorganisational plans.

(c) *The Small Scale Industries Board, the Khadi and Village Industries Commission and the All India Handicrafts Board.*—These three agencies have accepted our recommendations regarding the organisational pattern of the training centres for rural artisans in the community development blocks. It is hoped that they in due time, will integrate their training centres with the rural artisans training centres set up by the States.

5. Permanency of the Training Centres

5.1. It is not necessary to state that, satisfactory training cannot be given if the right type of Instructors and equipment is not provided. At present the rural artisans training schemes have been treated as temporary and have, therefore, faild to attract better type of Instructors, also adequate funds for purchasing machines, equipment and putting up suitable buildings have not been forthcoming both at the State level and the Central level. We cannot visualise these schemes of rural artisan training losing their importance or a necessity arising for their curtailment to any appreciable degree in the near future. If these schemes are run in a proper manner, they will continue to satisfactorily serve the village community. As such, we recommend that a long term view of these schemes may be taken and they should be treated as permanent schemes of the Government.

6. Central Organisation for Coordination

6.1. The National Council for training in vocational trades has been created by the Government to lay down the policies in respect of vocational training in the country and to coordinate the schemes for craftsmen training in the different States. This Council lays down the standards, issues the National Trade Certificates as well as makes recommendations in the manner in which the craftsmen training programmes should be implemented. In the States, State Councils for training in vocational trades have been formed for ensuring implementation of the policies, recommendations and programmes of the National Council. We feel that it is essential to have an organisational pattern of this nature to exercise over-all supervision and to formulate policies for the rural artisan training schemes also. We are of the opinion that these schemes should also be brought under the aegis of the National Council for training in Vocational Trades.

6.2. Representation in the National Council as well as in the State Council will have to be given to the representatives of different interests concerned with the rural artisans training.

7. Syllabus of Training

7.1. We have closely examined the syllabii which we have been able to obtain from the State Governments and other agencies. We have also observed the methods adopted in a number of training centres for instructing the trainees. We find that in the majority of cases, the method of instruction as well as the training courses and subjects of teaching both practical and theoretical are left to the Instructors. The Instructors who in the majority of cases, are themselves neither trained nor efficient craftsmen nor have any considerable experience of teaching, are unable to organise or teach the trainees satisfactorily. There is also scarcely any body over the Instructors who can competently guide the Instructors in this respect. We are therefore, of the opinion that for the type of Instructors who will be available for training rural artisans, it is necessary that the syllabii which they will follow, should go into the greatest details, both in respect of theoretical as well as practical training, so that very little is left to the imagination of the Instructors.

7.2. The syllabii should have complete exercises for training arranged in a progressive manner. Similarly the theory part should be arranged in such a manner that if the Instructor gets the trainees to do the exercises in the prescribed manner and gives instructions on each item of the trade theory laid down in the syllabus, he would be successful in training the trainees to the required standard.

7.3. The emphasis should always be on the practical side rather on theory. We feel that the training can be imparted more quickly and satisfactorily by demonstration rather than by verbal instructions and this has to be borne in mind when drawing up the syllabii.

7.4. While preparing the syllabii for different trades, the fact that power will be available in a limited number of villages should be borne in mind. Most of the rural areas will be without any electric power for a long time to come.

7.5. Along with the syllabii, the list of equipment to be provided for each trade should be drawn up with complete specification of each item. Merely giving the bare name of the machines without complete spcifications may result in obtaining unsuitable machines and equipment for this special type of training to be given to rural artisans.

7.6. We recommend that the training to village artisans should not be restricted to the trade of one category; for instance, it will be necessary for a village blacksmith to know something about fitting as well as carpentry. Similarly a village carpenter should know something about fitting also. Allied trades for each category in which training has to be given, should be laid down.

7.7. We recommend that in addition to trade training general information should be given about cooperatives, normal trade channels, cost and specifications of the material used in the trade as well as the agencies at present available to the village craftsmen for help in the scale and development of their craft. Syllabii in part II of the report may be taken as a guide with necessary modifications.

8. Location of Training Centres

8.1. Before locating a training centre, we recommend that a survey of the area should be carried out to determine the categories of trades to be clustered in the training centre. The training centre should be located in rural surroundings in a block and be easily accessible to the category of persons who will come for training in that centre.

9. Selection of Trainees

9.1. We cannot over emphasise the importance of exercising the greatest care in selecting the trainees. In India there are hereditary families who have been carrying on with the same trade for generations and a young person from that family will in probability derive more benefit and will be quicker to learn the family trade than another person who is no so brought up.

9.2. There should be a Selection Committee comprising representatives of Industrial Cooperatives and Block Committees who know the local conditions and in whom the people of the area have confidence.

9.3. The number of persons selected for each trade should have close relation to the needs of the particular area and the absorption capacities of the products of that trade. It should be borne in mind that with training and better equipment, there will be considerable increase in production as well as in the quality of the goods produced.

9.4. In the matter of selection of trainees for upgrading the skill either by means of peripatetic parties or a short course of training in Institute, it would be advisable to first generate the interest and the enthusiasm of the would-be-trainees for obtaining increased skill and technique. It would also, be desirable that arrangements should be made for demonstrating a positive proof and examples of the benefit which the craftsmen will obtain if manufacture is made less laborious, or is of better quality if there is increased production or the products of their trade are made financially more profitable.

10. The Size of the Training Centres

10.1. We have found that not very much thought has been given to fix a ratio between the number of trainees and an Instructor in particular crafts in the training centres in rural areas. There are large variations. As the level of education of the village trainees who will come for training will be low, most of the training will have to be given on the floor of the workshop by demonstration. The trainees will have to be guided in their efforts to learn a trade. We therefore, recommend that as a general rule, not more than 15 trainees for one Instructor should be permitted for any trade in a training centre.

10.2. A 'cluster' type of training centre with four trades will thus, have 60 trainees and we consider that this should be made the standard common pattern for all training centres. Bigger training centres will likely make it difficult to give personal attention to the trainees and may militate against the development of a proper master-trainee relationship.

11. Age Limit and Qualifications of Trainees

11.1. While there should be no age limit of the trainees for upgrading the skill, we consider that it is necessary to lay down a minimum and maximum age limit for trainees to the institutional training centres. We recommend that the minimum age limit should be 16 years and persons of over 30 years of age should not generally be admitted in these institutions. In villages, young persons generally start learning a trade at a lower age than in urban communities and after the age of 30, it is felt, the men from rural areas will not be mentally responsive to craftsmen training.

11.2. In regard to general education, we consider that there should be no restriction of any kind for persons who come forward for upgrading their skill, while for candidates for admission to institutional training centres, the ability to read and write and do simple arithmetic *i.e.* a pass in the primary school course should be the minimum qualifications.

11.3. There should however, be no rigidity in this respect and educational qualifications should be relaxed to enable persons from backward communities and from hereditary professional communities to take advantage of the courses in large numbers.

12. Duration of Training

12.1. At present, we found that no standards had been fixed of the level of skill to be acquired in the different trades in the training centres which we have had occasion to visit. The period of training also varied from centre to centre and from craft to craft. We agree that there cannot be any uniform period of training for all the trades but we consider that it is necessary that proficiency and skill to be acquired in each trade should be fixed and standardised. This will necessitate fixing of the period of training for each trade and we recommend that these should be clearly laid down in the syllabii of training for each craft. We have indicated as a guide the period for training for each of the 26 trades or crafts which we have selected for this training and we would recommend that this should be followed as far as possible. The syllabii the exercises to be carried out and the rate of progress should be regulated accordingly.

It must, however, be clearly understood that the period of training depends on a number of variables like the equipment which will be available, the attainments of the Instructors and the general level of intelligence and adaptability of the trainees in any particular area. The period of training will, therefore, have to be varied to suit conditions.

12.2. In regard to upgrading the skill whether in the institutes or by peripatetic parties, period of training should be determined by carrying out an assessment of the existing skill available, the ability of the trainees to imbibe the instruction given, the periods of time for which the men will be available for this instruction per day as well as the level of the skill which is required to be developed. We consider that the period of training by peripatetic or mobile parties for upgrading the traditional skill should generally be not less than 15 days at one place even for the shortest training course. The period of stay of the traditional artisans in the institutes for short period of intensive course for upgrading the skill should not be less than 7 days.

13. Hours of Work

13.1. Hours of work of upgrading of traditional skills obviously cannot be fixed. These will have to be fixed to suit the convenience of the craftsmen after joint consultation. It should, however, be borne in mind that as far as possible, endeavour should be made to obtain quick results, otherwise there is danger of staleness setting in and the scheme losing its attractiveness.

In regard to hours of work for training centres, the hours of work should be as those generally observed by the craftsmen in that area and normally not less than 8 hours per day.

14. Workshop, Class Rooms etc.

14.1. We do not recommend any steel and concrete structures for these training centres. The buildings and sheds should be generally in conformity with what is obtaining in the villages. The workshop and buildings should be as far as possible erected of material locally available.

15. Hostel Accommodation

15.1. As the training centre will serve 4 or 5 blocks, it is necessary that the hostel accommodation should be provided for a majority of the trainees. Hostel accommodation should be free and we recommend that physical training and some form of social work should form part of the hostel life of the trainees.

16. Stipends and Prizes

16.1. We have observed that there is no uniform rate of stipend for the trainees in the training centres in the different States. Owing to poverty and inability of the village folks to visualise the advantages of the training on a long range basis, the guardians of the young persons who are potentially most suitable for this training, are generally not prepared to send them for training as it entails the loss of the earning capacity of these persons. To be able to attract them, it is necessary that the stipends to be given should be approximately of an amount adequate to at least cover the loss of earning capacity which the guardians will incur. Giving stipends of 10 or 12 rupees per month as is the practice in some Institutions, does not serve any useful purpose. We, therefore, recommend that as the necessity of offering stipends has been accepted, the stipends should be commensurate, with what untrained young persons in a village will be able to earn. We consider that a minimum rate of Rs. 20 p.m. per trainee as stipends for those who attend as day scholars should generally be fixed for all Institutional Training Centres. To trainees who reside in the hostel, a stipend of Rs. 30 should be paid.

16.2. In a very large number of cases, it is noticed that stipends are not paid regularly to the trainees. We recommend that this irregularity wherever found should be put down with a strong hand. These institutions should serve as an example of discipline and organization.

16.3. We do not recommend any stipend to be paid to the craftsmen who are trained by mobile or peripatetic parties. We feel that no inducement for taking this training will be called for if the training is given in an effective manner and is found by craftsmen to be of financial and economic value.

16.4. We also recommend that there should be a day set apart every year in every institution when a function should be held to give publicity to the advantages of these schemes where prizes could be awarded to the trainees on the results achieved through mobile or peripatetic parties as well as in the institutional training centres.

17. Periodical Progress Test

17.1. We have observed that no steps are being taken at present to periodically determine the progress of the trainees in both the Institutional training centres as well as in peripatetic and mobile

parties. We would recommend that a system of periodical tests and assessment should be introduced in both these schemes to find out the extent of progress being made as a result of the training being given to the trainees. We do not consider that merely final assessment trade test is adequate.

18. Issue of Certificates to Successful Trainees

18.1. At present certificates to successful trainees are being issued by different State Departments and agencies who are running these schemes. We would recommend that a standard and uniform design of certificate should be evolved and it should be issued by the respective State Councils for vocational training.

19. Supervision and Inspection

19.1. As a result of our discussions and observations we have come to the conclusion that a great deal of inefficiency in the training centres is due more to ignorance than wilful negligence. This can be remedied in our opinion by recruiting technically qualified staff, who have experience of village conditions. These persons should generally, be from the area where the training centres are situated so that they can speak to the trainees and the craftsmen in the area in their own dialect and are able to have sympathy for their difficulties and conditions. We also recommend that there should be qualified staff appointed at the State level to carry out regular inspections and day-to-day supervision over the work being done in the training centres. The Extension Officers (Industries) should also be in direct touch with the work.

19.2. The results of the instructions and supervision and the action taken should be recorded. These should be summarised and put up to the State Council for vocational training for discussion and formulation of policies and decisions every year.

19.3. We also recommend that Advisory Committees comprising suitable persons and Government officers concerned of the area should be formed for spot consultations and eliciting public opinion in regard to the progress and the quality of the training being given.

20. Delegation of Powers

At present adequate powers are not delegated to the local officials in some of the States to enable them to deal effectively with day-to-day matters which effects the training adversely. It is recommended that at least the following powers be delegated to these officials:—

20.1. The District Industries Officers or the B.D.Os. according to local convenience should be made drawing and disbursing officers to facilitate prompt payment of stipends.

20.2. They should similarly be delegated powers to make purchase of equipment and raw materials in accordance with procedure and standing instructions to be laid down for the purpose.

20.3. The heads of the Institutes should be given some advances for petty expenses on the imprest system.

20.4. As production will be only incidental to training, marketing of finished product is not likely to create any difficulty, we would however, recommend that necessary powers may be delegated to the local officers, where the training centre is situated to arrange for their disposal according to instruction to be laid down for the purpose by the administrative authorities.

20.5. We would also recommend that arrangement may be made to display in the Institutes and in the selected shops in the local market articles produced by upgraded craftsmen and ex-trainees for publicity and to obtain reaction of the consuming public.

21. Supply of Raw Materials for Training

21.1. We have already observed irregularity in the payment of stipends. Another factor which can adversely affect the training and can bring the training centres into public disrepute, is the shortage of the supply of the raw material. Supply of equipment without the necessary raw materials is of no value. We would, therefore, recommend that adequate arrangement should be made for regular supply of raw materials of the required quantity and quality.

22. Teaching Staff

We have observed before that the two main factors on which the success of these schemes very largely depends are the provision of suitable Instructors and the supply of equipment and raw material. We have dealt with the question of equipment and the raw material and have also commented on the poor quality of Instructors. We find that adequate attention has not been given to recruit the right type of Instructors. The result is that the general run of Instructors at these training centres is of a very low standard. Unattractive scales of pay, temporary nature of the job and the lack of appreciation of the importance of recruiting suitable qualified instructors, appear to us to be the main reasons for the low standards prevailing at present.

22.1. We would recommend that (a) the greatest care should be exercised in selecting Instructors and (b) the teaching staff should be appointed, if not on a permanent basis, at least on a long term basis. The results of the training being given to the persons in any one Training Centre can be determined only after the persons concerned have finished their training and have obtained employment as a result of their training. The main responsibility for turning out suitable trained village craftsmen lies squarely on the shoulders of the teaching staff.

22.2. We consider that a pay scale below that Rs. 125 to Rs. 250 p.m. will not attract suitable Instructors.

22.3. In a 'cluster' type of training centre, there should be one Instructor for each trade and a Superintendent in over-all incharge of the training centre.

We would recommend a minimum scale of Rs. 250—350 for the post of a Superintendent.

23. Qualifications of the Teaching Staff

23.1. The Superintendent should be at least a Matriculate with a trade certificate in one of the trades in the 'cluster' type of training centre with at least 3 years experience.

23.2. Care should be taken to see that only those persons are selected who will stick on in the Institution for some appreciable time.

23.3. Instructors should be persons who can read and write the language of the area fluently and can do simple arithmetic. They should generally be elderly people possessing considerable skill and experience in the trade and if possible, should be recruited on a regional basis.

24. Training of Instructors

24.1. Teaching methods, teaching techniques and the principles of teaching have made considerable advance and in view of the special type of trainees who have to be trained, it is necessary that the Instructors, both for Institutional training centres as well as for mobile parties should go through a course of Instructor-training.

The Ministry of Labour and Employment has set up two central training institutes for Instructors for producing Instructors for training craftsmen for organised industry and is arranging to establish four more such institutions.

The Khadi and Village Industries Commission has also been running Instructor training courses.

24.2. In the rural artisans training schemes, no provision has so far been made for training of Instructors for rural artisans and we would recommend that training institutes for this purpose be established.

24.3. The Ministry of Labour and Employment has considerable experience in running Instructor training institutes and we recommend that that Ministry should be given the responsibility for organising and setting up Instructor training institutes for rural artisans Instructors.

We have no doubt that the Khadi and Village Industries Commission and other Boards will render necessary assistance to the Ministry of Labour in running the training courses for Instructors for rural artisans.

25. Follow Up

25.1. We have had occasion to remark previously that the success of these training schemes will largely depend on the results achieved by the trainees after their training. It has been observed that there is considerable delay in settling down the trainees in the trades on an organized basis or independently for want of any regular follow-up schemes linked up with the training programme. Such delay causes frustration to the trained persons, who in their difficulty take to other

means of earning their livelihood. We, therefore, recommend that arrangements should be made simultaneously with the training being given for the absorption of the trained persons in gainful employment. We consider that the planning of follow-up should be comprehensive and the following steps are recommended:—

25.1. (*a*) *Organisation.*—There should be regular arrangements for organizing the trained persons expeditiously wherever possible into industrial cooperatives to enable them to take up production on an organised basis or draft them independently as self-employed persons on a cottage industry basis or in production centres started by Government or other concerned agencies wherever necessary. Enrolling the trainees into cooperative societies may be completed, as far as practicable, before the trainees leave the training centres. It will be helpful if separate production centres started by Government to employ trained artisans are converting into industrial cooperatives.

25.1. (*b*) *Procurement of raw materials.*—Arrangements for procurement of the required raw materials should be made through cooperatives and other agencies and they should be linked up with Government supply Departments or apex cooperatives having such business.

25.1. (*c*) *Credit facilities.*—There should be adequate arrangements for credit facilities. For this purpose the All India Boards, the Khadi Commission, the Cooperative Banks and the provisions under the "State Aid to Industries Act" should be used. Procedural and administrative difficulties involved in making credit facilities available according to the requirements of the trainees should be speedily removed to facilitate prompt supply of adequate credit facilities. It has been the experience that wherever provision for loan to artisans under block budgets was made with necessary administrative powers to the Block Development Officers for distribution, the trained persons have been able to obtain necessary financial assistance promptly. It is, therefore, felt that nucleus provisions for loans to artisans should be made in the block budgets. Steps should be taken for enabling to give small loans to artisans on personal bonds or surety of one or two persons for credit worthy purposes.

25.1. (*d*) *Supply of improved tools & equipment.*—Arrangements for supply of improved tools is very necessary to induce the trained craftsmen and the traditional artisans to improve their skill. The programme initiated by the Ministry of Community Development and Cooperation for supply of improved tools for blacksmithy and carpentry is considered to be a move in the right direction. It will be necessary to include improved tools for other village and small industries in approved list in which training is given for the benefit of trained artisans. There should be an arrangement to supply essential tools to trained artisans at subsidised cost, immediately after training, in order to enable them to settle straight away in their profession.

25.1. (e) *Adequate marketing facilities.*—The importance of adequate marketing arrangements of the products whether of the industrial cooperatives or of trained artisans who have settled down to trades individually can hardly be over emphasised. Not only should the production units be linked up with the apex marketing cooperatives, small industrial cooperatives and the sales depots or emporia managed by the Government or the Boards and the Commission but they should also be assisted to supply the requirements of various local institutions and Government concerns. Werever necessary, cooperatives sales depots should be organised for marketing products and also for supply of raw materials.

25.1. (f) *Post training guidance.*—We recommend that the career of each trained artisan should be followed up and contacts maintained so that help and guidance may continue to be given. The training centres should maintain upto date records of the careers of the trainees in order to find out whether the training being given has served the purpose and also to modify the training in the light of field experience to meet the changing requirements of the trades.

There should be close liaison between the institutional training centres and the Block Level industries Extension Officers, who should be encouraged to bring the problems of the trained artisans in the field to the notice of the Superintendents and the Instructors in the training institutions so that solutions may be found for them.

1. Shri P. Rajnath	Sd/- 27-1-60
2. Shri A. D. Bohra	Sd/- 27-1-60
3. Shri Dhirubhai Desai	Sd/- 27-1-60
4. Shri J. P. Govil	Sd/- 27-1-60
5. Shri V. Padmanabhan	Sd/- 27-1-60
6. Shri P. L. Sethi	Sd/- 27-1-60
7. Shri P. S. Nadkarni	Sd/- 27-1-60
8. Shri P. M. Mathai	Sd/- 27-1-60
9. Shri A. Sarkar	Sd/- 27-1-60
10. Shri K. L. Nanjappa	Concurrence given by wire.

*Shri S. P. Dutta could not attend the meeting

SUMMARY OF RECOMMENDATIONS

1. It is felt that a stage has been reached when a comprehensive and thorough overhaul of the training schemes should be undertaken on a realistic basis with a view to producing trained artisans to meet the requirements of the expanding development programmes in rural areas.

2. There is no doubt that successful implementation of training schemes will bring improvement in the economic conditions of the craftsmen as well as result in increased production of new goods and better maintenance and fuller use of existing skills and means of production.

1. (p—13) Type of Training Required

1.1. The type of training required for rural artisans will have to be different from the training being given to the artisans for modern organized urban industry. The rural artisans require diversified skills in allied crafts and organizational knowledge to meet rural demands.

1.2. The training should be closely related to the demands of the village communities and emphasis should be laid on improving the skill of traditional artisans.

1.3. It will also be necessary to create a new set of skilled craftsmen of young persons who can produce new types of goods and to meet the needs of expanding rural industries.

1.4. The type of training organisations for the rural artisans should be of two types namely :—

(a) Institutional training centres for training persons to take up a trade as an independent profession or in an organised basis in village cooperatives.

(b) Mobile training parties and centres for upgrading the existing skills of the craftsmen in concentrations of artisans in the villages.

2. (p—14) Selection of Trades for Training

2.1. A careful survey of the area should be carried out to assess the requirements of the skills and the trained artisans on a long term as well as short term basis in the light of the industrial development programmes in the immediate as well as the adjoining blocks on more or less zonal basis.

2.2. 26 trades are recommended for the common programmes of training. This list should not be treated as rigid and new or traditional trades which have potentiality of development should be selected according to the programmes of development of the State Governments and the needs of the area.

3. (p—14) Organisational Pattern of the Training Centres

3.1. While greatest care should be taken to re-organize and remodel the existing training centres with better equipment, capable

and trained Instructors—new centres for new trades should only be opened where there is felt need.

3.2. Normally four trades should be clustered together in a well equipped institutional training centre and these centres should normally cater to the needs of 4 or 5 blocks. The 'cluster' type of institutional training centres should be the standard pattern as far as institutional training is concerned. According to the approximate estimates indicated in the report, the total expenditure for a clustered type of training centre during the 1st year of the order of Rs. 1.59 lakhs, while the recurring expenditure per year would amount to Rs. 46,000 approximately.

3.3. A certain amount of flexibility in the number of trades should be permitted so that the special requirements of training of a particular area may be catered for.

3.4. Peripatetic or mobile training parties should generally be extension wings of the institutional type of training centres.

3.5. It may also be necessary to take selected artisans from their places of work to the institutional training centre for short periods of intensive courses for upgrading their skill and increasing their technical efficiency on special machines and tools and improved methods of production and maintenance.

3.6. Separate peripatetic training units or parties should also be formed for those trades which cannot generally be located in the 'cluster' type of institutional training centres.

3.7. Opening of new training-*cum*-production centres in rural areas either for imparting new skill or upgrading the skill of traditional artisans is not recommended. Wherever such training-*cum*-production centres exist, the production part of it, if economically sound, should be completely separated from the training part under separate staff and supervision.

4. (p—16) Rationalization of the Training Programmes

4.1 Administration of the training organisations for rural artisans should be vested in one agency at the State level.

4.2. To obtain the best utilisation of the training facilities existing under the various agencies, the following recommendations are made:—

(*a*) *Ministry of Labour and Employment*

Although a number of fairly well equipped training centres are being run by the State Governments under the training programme of the Ministry of Labour and Employment, these are not considered suitable for the training of rural artisans, whose requirements to work as self-employed or on organized basis are entirely different.

(*b*) *Central Silk Board & the All India Handloom Board.*

Some of the training centres being run by the State Governments with funds from the All India Handloom Board and the Central Silk Board should be integrated with the proposed training programme.

(c) *The All India Handicrafts Board, the Small Scale Industries Board & the Khadi & Village Industries Commission.*

The Small Scale Industries Board, Khadi & Village Industries Commission and All India Handicraft Board have accepted the organisational pattern of the proposed training centres. It is hoped that they in due time will integrate their training centres with the rural artisans training centres of the States.

5. (p—17) Permanency of the Training Centres

5.1. If the training schemes are to be run in a proper manner and satisfactorily serve the rural areas, a long term view of the schemes should be taken and they should be treated as permanent schemes of the Government.

6. (p—17) Central Organisation for Coordination

6.1. These training schemes should be brought under the purview of the National Council and the State Councils for training in vocational trades to exercise overall supervision and formulate policies.

6.2. Representation should be given to different interests and agencies concerned with the rural artisans training programme, in the National Council at the Centre and the State Councils in the States.

7. (p—17) Syllabus of Training

7.1. For the type of Instructors, who will be available for the training of rural artisans, it is necessary that the syllabii should go into the greatest details, both in respect of theoretical as well as practical training, so that very little is left to the imagination of the Instructors.

7.2. The syllabii should have complete exercises both for theoretical knowledge and practical skill arranged in a progressive manner.

7.3. The emphasis should always be on the practical side rather than on theory.

7.4. The fact that power will be available in a limited number of villages, should be borne in mind.

7.5. Along with the syllabii, the list of equipment should be drawn up with specification.

7.6. Allied trade in which training is to be given under each category of trade should be laid down.

7.7. In addition to trade training, general information should be given about cooperatives, normal trade channels, cost and specifications of the material used and agencies available to the artisans to help in sales. Syllabii on 26 trades given in part—II of the report may be taken as guide with necessary modifications.

8. (p—18) Location of the Training Centres

8.1. The training centre should be located in a block in rural surroundings and be easily accessible to the trainees.

9. (p—18) Selection of Trainees

9.1. In the matter of selection of trainees, preference should be given to young persons from families of traditional artisans.

9.2. There should be a Selection Committee comprising representatives of industrial cooperatives and block committees.

9.3. The number of persons selected for each trade should have close relation to the needs of the particular area.

9.4. For upgrading the skill, it would be desirable to first generate the interest and the enthusiasm of the would-be-trainees for obtaining increased skill and technique.

10. (p—19) The Size of the Training Centres

10.1. As a general rule, not more than 15 trainees for one Instructor should be permitted for any trade in a training centre.

10.2. A cluster type of training centre with 4 trades will thus have 60 trainees and this should be the standard pattern for all cluster type of training centres.

11. (p—19) Age Limit and Qualifications of Trainees

11.1. There should be no age limit of the trainees for upgrading the skill. The minimum age limit should be 16 years and the maximum 30 years for trainees to be selected for institutional training.

11.2. In regard to general education, there should be no restriction of any kind for persons who come forward for upgrading their skill, while for candidates for admission to Institutional training centres, the ability to read and write and do simple arithmetic should be the minimum qualification.

11.3. Educational qualification should be relaxed to enable persons from backward communities and hereditary professional communities to take advantage of the courses in large numbers.

12. (p—20) Duration of Training

12.1. It is necessary that proficiency and skill to be acquired in each trade should be fixed and standardized. This will necessitate fixing the period of training for each trade which should be laid down in the syllabus for training of each craft. The period of training indicated in the syllabii for 26 crafts (in part—II of the report) should be followed as far as possible.

12.2. In regard to upgrading the skill period of training should be determined by carrying out an assessment of the existing skill available and the ability of the trainees to imbibe instructions given. But it should not be less than 15 days even for the shortest training course and less than 7 days in the Institutional centres for the traditional artisans.

13. (p—20) Hours of Work

13.1. Hours of work for upgrading traditional skill will have to be fixed to suit the convenience of the craftsmen after joint consultation.

13.2. Regarding the institutional training centres, the hours of work should be those as generally observed by craftsmen but in no case less than 8 hours per day.

14. (p—21) Workshop, Class Rooms etc.

14.1. The workshop and buildings should be erected as far as possible of materials locally available.

15. (p—21) Hostel Accommodation

15.1. As the training centres will serve 4 or 5 blocks, it will be necessary that free hostel accommodation should be provided to a majority of the trainees.

16. (p—21) Stipends and Prizes

16.1. To be able to attract suitable trainees, it is necessary that the stipends to be given to them should be commensurate with what untrained young persons in a village will be able to earn. A minimum rate of Rs. 20 per trainee per month as stipend for those who attend as day-scholars should be fixed for all institutional training centres. To the trainees, who resided in the hostel, a stipend of Rs. 30 per month should be paid.

16.2. No stipend is recommended for craftsmen who are trained by mobile or peripatetic parties. If the training is effective and of financial and economic value to the craftsmen, the craftsmen will themselves imbibe the parties.

16.3. Prizes should be awarded to the trainees on the results obtained through peripatetic or mobile parties and institutional training centres with an annual functions for the purpose in each Institute.

17. (p—21) Periodical Progress Test

17.1. A system of periodical tests and assessment should be introduced in addition to final assessment to find out the extent of the progress being made by the trainees and if a change in methods and technique of training is called for.

18. (p—22) Issue of Certificates to Successful Trainees

18.1. A standard and uniform design of certificates should be evolved and it should be issued by the State Councils for vocational training.

19. (p—22) Supervision and Inspection

19.1. There should be qualified staff appointed at the State level to carry out regular inspections and day to day supervision over the work being done in the training centres. The Extension Officers (Industries) should also be in direct touch with this work.

19.2. The results of instruction and supervision and the action to be taken should be recorded. These should be sent up to the State Council of vocational training for discussion and formulation of policies and decisions every year.

19.3. Advisory Committee comprising suitable persons and government officers concerned of the areas should be formed for on the spot consultation and eliciting public opinion on the progress and quality of training.

20. (p—22) Delegation of Powers

20.1. The District Industries Officers of the B.D.O.'s according to the local convenience should be the drawing and disbursing officers to facilitate prompt payment of stipends.

20.2. Powers should be delegated to these officers to make purchase of equipment and raw materials in accordance with procedures and standing instructions to be laid down for the purpose.

20.3. The Superintendents of the Institutes should be given some advance of money for petty expenses on the imprest system.

20.4. As production will be incidental to the training—necessary powers may be delegated to the District Industries Officer or the B.D.O.'s as the case be for the disposal of the finished products according to instructions to be laid down for the purpose.

20.5. Arrangement should be made for display of the finished goods in the Institutes and selected shops in the local market for publicity and to obtain reaction of the consuming public.

21. (p—23) Supply of Raw Materials for Training

21.1. Adequate arrangement should be made for regular supply of raw materials of the required quality and quantity to the training centres.

22. (p—23) Teaching Staff

22.1. Greatest care should be exercised in selecting suitable Instructors. Teaching staff should be appointed if not on permanent basis, at least on a long term basis.

22.2. It is considered that a pay scale below that of Rs. 125 to 250 per month will not attract suitable Instructors.

22.3. In the cluster type of training centres, there should be one Instructor for each trade and a Superintendent in over-all charge of the training centre. A minimum pay scale of Rs. 250 to 350 for the post of a Superintendent is recommended.

23. (p—24) Qualifications of the Teaching Staff

23.1. The Superintendent should be at least a matriculate with a trade certificate in one of the trades in the cluster type of training centre with at least 3 years practical experience.

23.2. Care should be taken to see that only those persons are selected who will stick on in the institution for some appreciable time.

23.3. Instructors should be persons who can read and write the language of the area fluently and can do simple arithmetic. They

should generally be elderly people possessing considerable skilled experience in the trade and should be recruited on a regional basis.

24. (p—24) Training of Instructors

24.1. Instructors both for institutional training centres and mobile parties should go through a course of Instructor training.

24.2. The Ministry of Labour & Employment should be given the responsibility for organizing and setting up Instructor Training Institutes for rural artisans Instructors.

24.3. The Khadi & Village Industries Commission and other Boards concerned should coordinate and assist the Ministry of Labour in running the training courses for Instructors for rural areas.

25. (p—24) Follow Up

25.1. Arrangements should be made simultaneously with the training being given for the absorption of the trained persons in gainful employment. The planning of follow up should be comprehensive and the following steps are recommended.

(a) *Organization*—

There should be regular arrangement for organizing the trained artisans expeditiously into Industrial cooperatives as far as practicable to take up on organized basis or draft them as self-employed persons or in production centres started by the Government or other concerned agencies wherever necessary. Separate production centres started by the Government to employ the trainees should be converted into industrial cooperatives.

(b) *Procurement of raw materials*—

Arrangements should be made for procurement of raw materials through cooperatives or other agencies linking them up with Government supply departments or Apex societies.

(c) *Credit facilities*—

There should be adequate arrangements for credit facilities. Procedural and administrative difficulties should be speedily removed. Nucleus provision for loans should be made in the Block budgets. Loans should be given on personal bond or the surety of one or two persons for creditworthy purposes.

(d) *Supply of improved tools & equipment*—

Scheme for supply of improved tools as already introduced in the community development blocks should include requirements of tools of other trades in which training is being given and the trained artisans should be given tools at subsidized cost to enable them to settle down to trades.

(e) *Adequate marketing facilities*—

Production units of trained persons should be linked up with Apex marketing cooperatives and the sales depots or

emporia managed by the Government or the Boards and the Commission and these should also be assisted to supply the requirements of various local Institutions and Government concerns. Wherever necessary cooperative sales depots should be organized for marketing products and also for supply of raw materials.

(*f*) *Post training guidance*—

Contacts should be maintained with ex-trainees to help and guide them. The training centres should maintain up-to-date records of the careers of the trainees in order to find out whether the training being given has served the purpose and modify the training in the light of field experience.

There should be close liaison between the Institutional training centres and the Extension Officers (Industries) who should bring the problems of the trained artisans in the field to the Institutes for solution.

Annexure I

Minutes of meeting held on 11th May, 1958, for considering the training programme of rural artisans and also reorganisation of production-cum-*training centres started in Community Development Blocks.*

A meeting was convened by the Ministry of Community Development to consider the training programme of rural artisans and reorganisation of production-*cum*-training centres that have been started in Community Development Blocks. The following were present :—

1. Shri B. Mukerjee, I.C.S., Joint Secretary, Ministry of Community Development (*Chairman*).
2. Shri S. A. Qadir, I.A.S., Joint Secretary and Director-General, Directorate General of Resettlement & Employment.
3. Shri P. Rajnath, Director of Training, Directorate of Training, Ministry of Labour and Employment.
4. Shri A. S. Lall, Deputy Director, Training, Directorate of Training, Ministry of Labour and Employment.
5. Shri R. Prasad, I.A.S., Joint Secretary, Directorate of Manpower, Ministry of Home Affairs.
6. Shri A. S. Gill, I.A.S., Deputy Secretary, Directorate of Manpower, Ministry of Home Affairs.
7. Shri K. L. Nanjapa, Development Officer, Ministry of Commerce & Industry.
8. Dr. M. L. Gupta, Planning Commission.
9. Shri A. S. Naik, I.C.S., Joint Secretary, Ministry of Community Development & Cooperation.
10. Shri S. C. Roy, Adviser (Training), Ministry of Community Development & Cooperation.
11. Shri A. Prakash, I.A.S., Deputy Secretary (T2), Ministry of Community Development & Cooperation.
12. Shri P. M. Mathai, Director (Industries), Ministry of Community Development & Cooperation.
13. Shri K. P. Misra, Under Secretary, Ministry of Community Development & Cooperation.
14. Shri O. P. Sharma, Technical Officer, Ministry of Community Development & Cooperation.

A paper on "Training programme for Rural Artisans" which was prepared by the Ministry of Community Development was earlier circulated to the Planning Commission, Ministry of Labour & Employment, Ministry of Home Affairs and Ministry of Commerce & Industry. The comments received from the Planning Commission and the Ministries were also circulated. The meeting considered the training programme for rural artisans and the reorganisation

of production-*cum*-training centres in the C.D. Blocks in the light of the paper; and the comments on the paper circulated earlier. Following conclusions and decisions were arrived at :—

1. In order to reorganise these production-*cum*-training centres it was decided that a proper syllabus should be framed and followed. The object of these centres should be clearly defined. These centres should be considered as training centres and production should be taken up only for purposes of or as incidental to training programme to the extent necessary to make the training effective and purposeful. It was also felt that these centres should be discouraged from undertaking commercial production. But wherever there is scope and demand, separate production centres can be promoted so that the artisans who are trained in the training centres could also be gainfully employed. Later on such production centres could be converted into industrial cooperatives of artisans.

2. Temporary Training Centres :

(*a*) It was decided that three or four training centres be organised in a district for rural artisans. These Rural Artisan Training Centres should be located at convenient places having proper rural atmosphere.

(*b*) Construction of new buildings for such rural artisans training centres should be discouraged. Houses in the village where such centre is located may be taken on rent for locating the centre. The attempt should be to get the majority of the trainees for the centre from the nearby villages. If any hostel is necessary for a few trainees, rented accommodation may be arranged. After the training centre has turned out two or three batches, it may be shifted to a new place to train artisans of that area.

(*c*) *Staff for the rural artisans' training centre* : One centre may take up 4 trades suitable for the area. About 16 trainees may be admitted for each trade. One Supervisor and 4 Instructors may be appointed on the instructional staff. As regards other staff one Store-keeper-*cum*-Accountant and one Chowkidar-*cum*-Sweeper should suffice.

(*d*) *Instructors* : Good Master Craftsmen from the rural areas should be selected as Instructors. To get such persons the minimum salary of an Instructor will have to be Rs. 120 p.m. Orientation training particularly in teaching methods should be arranged for these Master Craftsmen who are selected as Instructors. As regards engineering trades like blacksmithy and carpentry a special course for Instructors will be organised by the Ministry of Labour. The existing Instructors' course at Koni and Poona under the Ministry of Labour is not considered suitable for this purpose. It has to be assumed that the Instructor's course for these rural artisans training centres is organised with a positive rural bias. As regards training of Instructors for other trades, it was considered that the Khadi & Village Industries Commission and the All India Boards attached to Ministry of Commerce and Industry should be approached. It is also necessary to pro-

vide a training reserve of Instructors for the proposed training centres for rural artisans.

(e) *Syllabus*: A Committee should be appointed jointly by the Ministry of Labour and Employment, Ministry of Commerce & Industry and the Ministry of Community Development to draw up a suitable syllabus for experienced technical persons from the Khadi Commission, and also the All India Boards may also be invited to serve on the Syllabus Committees.

(f) *Selection of trainees*: Selection of trainees for the rural artisans training centres should be done very carefully. As far as possible they should be recruited from amongst the rural artisans class.

(g) *Stipends*: Stipends may be provided in deserving cases on merit-*cum*-poverty basis but not for all trainees.

(h) *Resources*: The cost of these rural artisans training centres may be met from the allotment of Rs. 65,000 for a block for a period of five years under the revised Community Development budget. In case of centres organised for the tribal areas the Ministry of Home Affairs may also supplement the resources of Ministry of Community Development. It was stated that the Ministry of Labour and Employment was not in a position to make any financial contribution towards this training.

(i) *Hours of work*: These centres for training rural artisans may function from 7 A.M. to 1 P.M. so that the rural artisans could take up private work during leisure hours to supplement their earning. Wherever necessary a second shift for training could also be organised.

(j) *Extension*: The Supervisor and the Instructors of the Training Centre should have close contacts with the artisans of the locality.

(k) *Supervision*: Besides maintaining adequate supervision by the concerned department of the State Government, the Zonal Organisers from Ministry of Labour may also assist in exercising supervision over those training centres for rural artisans but the persons who are deputed for supervision should know the requirements of the rural areas.

(l) *Follow up*: Adequate steps should be taken to see that follow up is properly done. While undergoing training the artisans could be acquainted with the rules and working of industrial cooperatives. Immediately after completion of the training and before they leave the centre they might be organised into industrial cooperative societies wherever possible. The artisans should also be provided with financial assistance without any time lag, for purchasing tools, equipment etc. and also for working capital. Block Extension Officer (Industries) and Gram Sevaks should keep close contact with these artisans who are trained in order to ensure that they are assisted to continue in the trade in which they are trained and are also gainfully employed.

3. Peripatetic Centres :

It was felt that no separate peripatetic training centres are necessary.

4. Urban Centres in C.D. Blocks :

It was decided that Ministry of Labour and Employment will examine that any urban centres for engineering trades started in the C.D. Blocks will be integrated with the training centres of the Ministry. The Ministry of Community Development will furnish a list of such training centres to the Ministry of Labour and Employment for further action.

Annexure II

List of trades approved by the Committee for training in the Community Development Areas.

I. Engineering Trades:

1. Carpentry including polishing and painting as related to carpentry.
2. Blacksmithy including tin smithy and sheet metal work.
3. General fitter.
4. Leather goods manufacture.
5. Bricks and tiles making.
6. Masonry.

II. Khadi & Village Industries

1. Khadi spinning, including Ambar Charkha & Khadi weaving.
2. Village oil industry.
3. Soap making from non-edible oils.
4. Flying tanning & bone digesting.
5. Bee keeping.
6. Village pottery including clay doll making.
7. Hand pounding of paddy and processing of other cereals.
8. Woollen Khadi spinning & weaving.
9. Hand made paper making.
10. Palm gur making.
11. Gur & Khandsari.

III. Handicrafts & miscellaneous trades:

1. Tailoring including cloth doll making & embroidery.
2. Mat making.
3. Cane & bamboo works.
4. Dyeing & printing of cloth.
5. Wooden toys & allied crafts (lacquer works).
6. Fibre industry.
7. Bakery & confectionery.
8. Fruits & vegetables preservation.
9. Hosiery & hand knitting.

Annexure III

Summary of comments received from the Ministry of Commerce & Industry and the State Governments on the Interim Report of the Syllabus Committee.

A. Ministry of Commerce & Industry

1. *Small-scale Industries Board*: "We agree with the recommendations of the Committee for setting up of a Central Institute for every four or five Blocks to be located in convenient place within rural surroundings and taking of four trades for training by a Central Institute.

We also agree with the other recommendations of the Committee subject to the following:—

(*i*) For the benefit of the artisans engaged in small-scale units, our Organisation is running a number of training courses in special trades such as: manufacture of footwear, thermometers, radio components, pottery wares, scientific glass apparatus, blue print reading, heat treatment, blacksmithy, cane-working, sheet metal, etc. at our Small Industries Service Institutes and Extension Centres. The aim of running these courses is to build up on the knowledge which the artisan-trainee already possesses by giving the latest techniques of production and equipment, etc. We should, therefore, be allowed to continue to run such courses in future also.

(*ii*) Training to artisans through Mobile Demonstration Vans is also being arranged by our Organisation. Since this training is of a peculiar nature and is helpful to the Small-scale Industrialists, the administratives control of these Vans and of the running of this programme should remain with this organisation as it is."

2. *Coir Board*: The Coir Board agrees with the views of the Committee in regard to the organisational pattern of training centres contained in Section II of the tentative recommendations of the Committee.

3. *Handicrafts Board*: The Board concur with the suggestion of establishing Central Institutes for 4 or 5 community development blocks. These centres should be fully equipped with the requisite machinery and equipment necessary for training in 3 to 4 crafts.

As regards setting up of mobile training centres, it may be stated that these are useful for up-grading the skill of existing craftsmen who cannot afford to leave their cottages. These should be established for such regions, the craftsmen of which have a keen desire to learn the use of improved tools and implements with a view to improve their workmansnip.

4. *Silk Board*: As Sericulture has not been included in Appendix 'A' of the report, the Silk Board has no comments to offer.

5. *Handloom Board*: Since the All India Handloom Board is not concerned with any of the selected trades in question and, further more, in view of the fact that no provision can be made from out of the Cess Fund for assistance to artisans either for training or for production of improved appliances, the Board is unable to furnish any comments.

6. *Khadi & Village Industries Commission*: The Commission accepts in general the suggestions made in the Rajnath's Committee's Interim Report for 4 or 5 Community Development Blocks and Small Mobile Parties for training rural artisans.

B. State Governments

1. Andhra Pradesh

They generally agree with the main recommendations of the Committee. However, their views are summarised as follows:—

Training centre on a temporary basis.—There is no such centre working under the C.D. programme in the State and all the centres are training-*cum*-production centres. In this State, the position is that the training is much more practical than theoretical. While the Instructors are generally not qualified in their jobs, the centres are not ill-equipped. The fact that jobs, are temporary is a real handicap in the recruitment of efficient Instructors. It remains to be seen whether the revised scale of pay as suggested will prove adequate enough to attract duly qualified candidates. The difficulty can be overcome to a large extent by replacing rules governing the service conditions of temporary employees.

Training-cum-production centres.—In none of the departmental centres commercial production is undertaken and there are no such problems as mentioned under this heading.

Peripatetic Parties.—Observations of the Committee under this para generally represent such experiences in this State as well.

Selection of trades & planning of the training programme.—The recommendations are being followed in this State.

Organisational pattern of training centres.—This Department entirely agrees with the suggestions that it would be better to re-organise the existing training centres instead of starting new centres. It is proposed to take up three or four trades in each regional training centre to cater to the needs of 4 to 6 blocks in each District of the State. As a matter of fact, this has already been attempted in this State.

The suggestions that extension wings or small parties should be attached to the centres is worth trying. The period of training to range under peripatetic parties from 15 to 30 days according to the needs of a trade and capacity of the artisans may be accepted.

Resources.—It is agreed that it would be better to integrate training programmes under one unified agency in the centre as well as at the State level by pooling up resources from different agencies.

Teaching staff.—The recommendations of the Committee that it is necessary to organize special refresher course of training for the Instructors is acceptable and this Department is seized of the problem. The establishment of regional Institutes under the Ministry of Labour as suggested in the report is necessary to train suitable Instructors. This Department is anxious to take full advantage of the training facilities that may be available under this scheme.

Selection of trainees.—Recommendations pertaining to the selection of trainees are under implementation in this State.

Hours of work.—The State has the following working hours fixed for the centres :—

8 A.M. to 12 Noon

1 P.M. to 5 P.M.

8 A.M. to 1 P.M. (Saturdays).

Stipends & hostel accommodation.—Stipends are being paid to the regular trainees in the training centres. The suggestion that a part of the stipend may be kept as a deposit and paid to them after completion is worth implementing. Instructions have also been given to all the Departmental officers that hostel accommodation should be provided to the trainees where necessary, if possible.

Follow-up programme.—The department agrees with the view of the Committee in this connection and has been working exactly on the lines suggested.

Organisation.—Organisation of the artisans into cooperatives is being attempted.

Procurement of raw materials.—Although it is engaging the attention of the State Governments but nothing definite yet worked out.

Credit facilities.—It will be advantageous to have a nucleus provision for loan in the schematic budget of all blocks, as in the case of old series of blocks.

Regarding extending institutional credit facilities to industrial cooperatives, it yet remains a problem in the State and class for speedy solution.

Supply of improved tools & equipment.—In this connection, it may be stated that implementation of the scheme for supply of improved tools as desired by the Ministry of C.D. may not be possible with funds available from the block funds.

Adequate marketing facilities.—It is necessary to organise marketing cooperatives or cooperative sales depots.

2. Bombay State

They are in general agreement with most of the recommendations contained in the report. The Study Group appointed by the Bombay Government for preparing the third plan for development

of small industries has also given thought to this problem and holds almost similar views which are briefly noted below :—

Training-cum-*service Institutes*.—It is proposed to have central training and service institutions in each district. Training arrangements in different trades in those proposed institutions will be determined on the basis of survey of potentialities, availability of raw materials, demand for goods in the market, possibilities of getting traditional artisans for training in improved methods and educated persons willing to settle down in this type of trade. The C.D. Blocks can take advantage of these institutes. These proposed institutions will also conduct short term training course to teach the hereditary artisans in the use of modern tools and implements. The centres can as well send mobile parties to the rural areas for the purpose. These institutions are also contemplating to conduct refresher course from time to time for the technical staff of the Department as well as for the ex-trainees. They will also try to extend the results of research obtained from research Institutes and laboratories to the field.

2. *Follow up*.—This is not being done satisfactorily. District Industries Officers have been given full instructions to implement the programme as far as possible within the available resources.

3. *Training*-cum-*production centres*.—It will be possible to start training-*cum*-production centres in certain types of industries. A batch of 15 to 20 trainees will be trained and a cooperative society will be organised to undertake production work. Efforts will be made to collect share capital from trainees during the training period. It is also contemplated to make over tools and equipment of the training centres to the society on loan and grant basis. A few local artisans and sympathisers would also be enlisted as members. C.D. Blocks may attach technical men to the society for two to three years with provisions from the block budget and may also give subsidy at about 12½ per cent on production and sale during the period. If this is done, the artisans will require certain competence and confidence to run the units.

4. *Supply of improved tools and implements*.—This is agreed to.

5. *Rural workshops*.—It is also contemplated to give encouragement to village blacksmiths and carpenters for establishing workshops.

6. *Credit facilities*.—It is possible to give financial assistance to the artisans under liberalised State aid to Industries Act and rules. It may also be possible to render financial assistance to cooperatives of artisans through central financing agencies. As the present system involved in this connection causes some delay, it would be quite good if certain provisions for loans in the block budget is made.

3. Punjab

Organizational pattern.—Regarding organisational pattern of the training centres, the State Government have accepted the suggestions and have requested their Directorate of Industries to take necessary action, by combining training facilities at one central place for four or five blocks.

Pooling of resources.—Regarding pooling of resources available from different sources for reorganization of the training centres with qualified staff and adequate equipment on permanent basis. It may be useful to have one such centre in each district, the trades having scope for development in the district should be taught and on the experiences gained, further remifications in the blocks could be introduced.

3. *Selection of trades.*—Trades can be selected from the list suggested in the report.

4. Orissa

Interim report is under consideration.

5. Jammu & Kashmir

Recommendations are useful and the State Government accepts them and these will be kept in view while making the proposals for the third plan.

6. Himachal Pradesh

In general agreement with the recommendations.

7. Mysore

They endorse the valuable and constructive suggestions made by the Committee which are almost similar to the recommendations of the Committee appointed by the State Government to review the working of various training institutes of the Department of Industries and Commerce of the State Government. They are taking actions for reorganization of the training Centres on similar lines.

8. Bihar

They do not agree with the views. They are of the view that the training-*cum*-production centres which have already been set up in the blocks are suitable. Their efficiency can be improved by administrative measures and taking suitable steps for supervision, selection of the trades and follow up measures.

In the reorganized centres, of central type as proposes, the problem of accommodation will be serious one, both for the trainees and the Instructors.

Construction of building for hostel accommodation etc. for the trainees coming from long distances will increase abnormally the non-recurring expenditure. The combined centres will have no bearing to the concentration of existing artisans in different areas.

The follow up programme will be aggravated. As the trainees will come from different blocks, it would be impossible to organise them into industrial cooperatives. What is therefore needed is to remove the deficiencies of the existing training-*cum*-production centres. Their further objections are noted below :—

(*i*) The suggestion that small mobile parties as extension wings of the Institutes would carry training facilities to

the doors of the traditional artisans, who cannot afford to go to the central institutes does not seem to be practicable. The proposed extension wing will by all intents and purposes be a peripatetic demonstration party which the Ministry of C.D. suggested for abolition in their letter of the 6th June.

(*ii*) As regards the trades selected for the development in C.D. areas, it will be useful to take up trades like soap and disinfectant making knitting and embroidery as well as glass bangles, beads-making which have been left out. On the other hand, bricks and tiles, masonry, hosiery and dyeing and painting of cloth have been included in the list. In this connection, it may be stated that bricks and tiles making is a craft which is well known and widely practised in the State. Similarly, masonry is practised only in a few areas having stone quaries. There are sufficient number of stone cutters and there is no necessity of training. Regarding hosiery, the trainees products will not be able to compete with mill made type hosiery goods. As regards, the trade relating to dyeing and printing of cloth. It has been pointed out on the basis of the available experience that the trainees' products are generally costlier and inferior in design as compared with factory printed goods. Already these traditional printers are extremely hard hit on account of competition from factory printed goods. Dyeing can duly be kept as an item of training, training with handloom weaving.

Regional institutions for training of Instructors.—Establishment of regional institutes for imparting necessary training to the Instructors will be helpful.

9. Madhya Pradesh

Selection of trades and planning of the training programme—Agreed.

Organisational pattern of training centres.—This is under examination.

Resources.—This is under examination.

Technical staff.—In their opinion, 30 per cent of the total staff for the entire programme should be brought on the permanent cadre, that will mostly cover the posts created during the first plan period.

Selection of trades.—Agreed.

Duration of the training course.—No comments.

Hours of working.—No comments.

Stipends and hostel accommodation.—No comments.

Supervision.—There is no council of training in trade in this State.

Follow up—

(*a*) Agreed.
(*b*) Agreed.
(*c*) Under examination.
(*d*) Under examination.
(*e*) No comments.

Post training guidance and refresher course.—No comments.

10. Madras

Accepted the recommendations of the Committee in full.

11. Pondicherry

Agrees with the views and recommendations of the Committee and has made the following suggestions :—

Staffing pattern for a trade.—1. Complete staffing pattern for a trade to train a certain specified number of students may be considered and recommended. The pay scale of each of the post may also be indicated.

2. Detailed requirements of equipment with complete specifications for each trade may be recommended.

3. The range of stipends depending on local conditions may be recommended.

The basis of disposing of articles that are produced may also be considered.

12. Rajasthan

1. The recommendations of the Committee in regard to selection of trades and planning programme are acceptable.

2. Regarding the second recommendation of the Committee the State Government feels that instead of having 4 or 5 trades clustered together in a Central type of training Centre in 4 or 5 blocks, it would be better to keep the training centres in different areas as they are to be as near the home of craftsmen as possible. There is already difficulty about trained technical hands. In the Training-*cum*-Production Centres, lesser technicians have been employed for want of properly trained hands. With the institutions as proposed by the Committee, it will be extremely difficult for the administration to keep such large number of technicians to man the proposed Central Institutions which has to function both for training and extension work. Again the technicians are to be of higher order than in present work centres which will be difficult to get till a few more years. The experience of the Ministry of Commerce and Industry in manning their Service Institutes and Extension Centres as well as the experience of the State Government in manning the production centres with the right type of instructors will prove that such a venture will be difficult of achievement. It might be possible alternative either to have a Central Poly-Technique in every State or

to have Central Institutions like the Central Poly-Technique or Central Footware Institute might be equipped and manned properly instead of having chain of Central Types of Training-*cum*-Production Centre with the triple functions of training, production and extension work.

3. In regard to the 3rd recommendation of the Committee it is observed that the need of training craftsmen at all levels is so great today that with the diversified attempt of producing more trained craftsmen by different levels may not be a wasteful expenditure. As such centralisation of 4/5 trades in a Poly-technique with a mobile extension wing to replace the production centres will not be any improvement on the present pattern of training. Centralisation at the State Level or at the level of the Ministry might lead to slowing down of the progress that is being achieved, due to inherent defect of Centralisation.

4. The 4th recommendation of the Committee regarding the teaching staff, is acceptable.

5. The same remarks apply to the 5th recommendation of the Committee (as on 4th).

6. Regarding the selection of Trades, in fact, in our State we always give more preference to the professional classes of artisans while imparting training.

7. The other recommendations of the Working Group in regard to the duration of training course, hours of work, stipend and hostel accommodation are acceptable. In this connection a reference is invited to a report of similar Committee set up by the Ministry of Commerce and Industry for evaluating the work of Training-*cum*-Production Centres. The Ministry of Commerce & Industry Committee has not also accepted the suggestion in regard to Centralisation of Training or creation of a single agency either at State level or Central level in the programme.

13. Uttar Pradesh.

I. *Selection of trades.*—Generally agreed to. Additional suggestions given.

II. *Syllabii.*—Generally agreed. Rigidity should be avoided in detailed standardization. Gives additional suggestions.

III. *The organisational pattern.*—Cluster type training centres already started.

IV. *Resources.*—Agreed.

V. *Training of staff.*—Generally agreed to.

VI. *Selection of trainees.*—Selection should be made according to the type of the centre to which admissions are proposed. In U.P. selections for block areas are made according to the recommendations of the Block Committees.

VII. *Duration.*—Training course should be followed by apprenticeship training for six months.

VIII. *Hours of work.*—Prescribed in U.P. according to their own requirements and convenience of the trainees.

IX. *Stipends & hostel accommodation.*—Agreed. These are in practice in U.P.

X. *Supervision.*—Agreed. Action has been taken to ensure proper supervision under the District Industries Officers and their subordinate staff.

XI. *Follow-up*—Generally agreed to. Elaborate programme has been taken up in this connection.

14. West Bengal.

I. *Selection of trades.*—Agreed. But handloom weaving should also be included for upgrading the skill of the existing ones.

II. *Syllabii.*—No comments, except that it would be difficult to get instructors from craftsmen.

III. *Organisational pattern.*—It is difficult to implement the cluster type training schemes. The rural artisans cannot afford to share and have their sons and dependents to be completely away from their homes for a stretch of time. Even if such trainees are available, they do not like to go back to their trades in the villages. This is the experience. The extension wings are very useful for upgrading the skill.

IV. *Resources.*—Agreed.

V. *Teaching staff.*—Agreed.

VI. *Selection of trainees.*—Agreed.

VII. *Duration of the training.*—Agreed.

VIII. *Supervision.*—Agreed.

IX. *Follow-up*—

(a) *Organization.*—Starting of production centres by government and converting them to Industrial Cooperatives later on is theoretically attractive but in practice does not work. If the Government starts such centres, all the equipment etc. should be handed over to the cooperatives as outright grant.

(b) *Procurement of raw materials.*—Agreed.

(c) *Credit facilities.*—Agreed. But the question of realization of loans given on personal security etc. should also be kept in view.

(d) *Supply of improved tools.*—Agreed.

(e) *Marketing facilities.*—Agreed.

Annexure IV

Draft Syllabus to be submitted to the N.C.V.T. for consideration
Government of India, Ministry of Labour & Employment

Training Department
Engineering Trades I.T.C.
Syllabus for Fitting Course
Length of Training Period—78 Weeks

Notes

(1) During the early stages of the course the trainees should be released from practical work by arrangement between the craft instructor and the specialist teachers for the time necessary for the trainees to reach the required standard of skill in workshop arithmetics and the reading of workshop drawings.

(2) The periods during which the trainees attend the specialist classes should be of short duration, normally not longer than 2 hours at one time and the object of the specialist instruction should be to bring the student to the level that will enable him to undertake the workshop duties of his craft. The specialist teachers should set periodic tests and as soon as a trainee has reached the required standard he should be excused further attendance to the class and devote the time to craft training.

(3) The craft instructor should set tests to check the trainees progress at the end of each 4/5 weekly period in training and maintain records of the progress of each trainee.

(4) The craft instructor will be responsible for teaching the theory of the craft and should ensure that the theory taught is related to workshop practices and not taken behind what is required to enable the trainee to undertake the workshop duties of his craft.

(5) The weekly work suggested on the syllabus can be alternated with any other week so that best use can be made of all tools and equipment and production work can be substituted for a syllabus item but in such cases care must be taken to ensure that the work is within the capabilities of the trainee concerned.

(6) The instructor must encourage the trainees to take notes during lectures, shop talks and demonstrations and instruct them to make fair copies from these notes. The fair copies must be corrected weekly. marks given for the work and records maintained. Dictation and copying from the Black Board should be avoided as much as possible.

(7) The daily shop talk or demonstration should deal only with an aspect of the work that is being undertaken in the workshop at that time. The only exception being when safety precautions are dealt with.

(8) Shop talks and demonstrations should be given in the workshops and lectures in the rooms provided for this purpose. The use of the latter must be strictly in accordance with the time table laid down by the Principal.

(9) Lectures should, normally, not be longer than 1 hour duration.

Annexure IV—contd.

Week No.	Details of Practical Work	Drawing No.	Shop Talk or Demonstration	Lecture (Subjects)
1.	The use of the rule and scriber measuring and marking out regular and irregular designs. Marking out using rule and centre punch and hammer. Mark out using centre punch for witness marking.	FI-1 FI-2 FI-3 FI-4 FI-5 FI-6 FI-7 FI-8 FI-9 FI-10	Safety Precautions. What to do in the case of an accident. Location of first aid box. Demonstrate the use of an engineers rule, how-to-use it, divisions and sub-division. Demonstrate marking out with rules and scriber. Demonstrate prick punch, centre punch and the use of hammers. Demonstrate the use of dividers for marking out (Not use chalked surface).	(1) The need for accuracy engineering work, accuracy at every stage and in each operation. Discuss measuring with an engineers rule. (One hour).
	Note.—The work pieces to be kept for future exercises.			(2) The care of tools, how good tools assist worker to maintain accuracy, minimises the manual effort and helps to obtain the desired finish to the work. (One hour). (3) The right tool for the job, make shift practices and danger involved tools designed for specific purposes. Right size spanner, correctly ground chisel, correct shape screw driver, right weight hammer, loose hammer head etc. etc. (One hour).
2.	Cutting to line with chisel Straight line work practice chisel, grinding (mild steel blanks and course grit wheel). The use of dividers, mark out radiused work piece. But to curved line with chisel. Curring to line with hacksaw.	F2-1 F2-2 F2-3 F2-4 F2-5 F2-6 F2-7 F2-8 F2-9 F2-10	Demonstrate the use of cold chisel and cutting to line. Securring work piece in the vice, supporting work-piece. Correct angle of chisel. Correct-cutting angle. Demonstrate grinding chisels. Demonstrate marking out using dividers. Transfer measurement from rule to work-pieces. Discuss calipers, odd legs and their uses.	The hacksaw, correct use, correct blade for work piece. Number of teeth, teeth stradling work piece, tension of blade, securel fastened, care of hack-saw frame pressure and speed of cut. (One hour). Classification of files in common use. Shapes and cuts. Give reasons and where the various grade of file should be used. (One hour).
	Note.—Work pieces to be kept for future exercises.			

3.	Cutting out figures with hacksaw Cutting to witness marks with hacksaw Filing to line, filing flat and square. File to produce figure work. Filing to close limits. Filing maling surfaces.	F3-1 F3-2 F3-3 F3-4 F3-5 F3-6 F3-7 F3-8 F3-9 F3-10	The engineers square (set square) where and how used, accurately. Demonstrate the use of the file. Filing to line, securing work piece in vice. The use of soft jaws in vice, damage to work piece. The purpose of witness marks. Filing to produce male and female fit. Demonstrate the use of copper sulphate in connection with marking out.	Continue with files in general use, purpose, grades, sizes. Half round, flat, (safe edge) (double safe edge) square, round and triangular. (One hour). *Note.*—Special files as scrapper, knife, pillar, Barrette not to be discussed at this stage. The use of surface plate, angle plate and scribing block for marking out. (One hour).
4.	Marking out with use of surface plate, angle plate and scribing block. Repeat with the use of engineers square. Cut to line with hacksaw and file to close limits. File to male and female fit (Each operation separately to emphasise necessity for accuracy). Filing true and square, Filing to radius.	F4-1 F4-2 F4-3 F4-4 F4-5 F4-6 F4-7 F4-8 F4-9 F4-10	Demonstrate the use of surface plate with angle plate for marking out. Care of plate use of copper sulphate, clamping work to angle. Procedure to be followed when marking out use of datum line. The use of the square when marking out. The necessity for accuracy, interchangeability. The right file for the job, use of safe edge file, triangular and half round files.	Discuss calipers, firm joint and spring. Not a measuring tool, used in conjunction with a rule or mating part. Lead up to sliding jaw calipers (calibrated in fractions). (One hour). The use of gauges types in general use accuracy of gauges. How they are made. Go and No go gauges. Slip ring and plug gauges. (One hour).
5.	Mark out curved line work using register marking. Filing to curved surface leaving register marks. Filing square, cleaning up one edge for use as datum.	F5-1 F5-2 F5-3 F5-4 F5-5 F5-6	Shop Talk or Demonstration. Discuss and Demonstrate fits, push, press and running Prick punch and Centres punch. Demonstrate use of safe edge file. Maintenance of files, use of file card.	(1) The tools and measuring instruments in general use. Discuss scribing block and its uses. (One hour).

Annexure IV—contd.

(1)	(2)	(3)	(4)	(5)
	Test.—Mark out, reduce to size with hacksaw, file to fit, male and female.	F5-7 F5-8 F5-9 F5-10	Discuss testing, the need for it during training, check of progress, indicates weak and strong points etc. for teachers' guidance.	(2) Mating parts, drilling and reaming screw cutting, to obtain the desired fits. How inaccuracy affects assembly or fitting of mating parts. Easy fits make for easy work but not a good product. Example nut and bolt, bearing sector pins. (One hour).
6.	Clean work piece, mark off using copper sulphate, angle plate, surface plate, scribing block and dividers. Mark out and Centre punch for drilling. Drill, using hand drill. Drill grinding practice using mild steel rod and course grinding wheel. Use of angle gauge. (Note—students should not be allowed to grind drills until they have had practice with M/s Blanks or M/s Drill Shapes received from the milling machine section).	F6-1 F6-2 F6-3 F6-4 F6-5 F6-6 F6-7 F6-8 F6-9 F6-10	Demonstrate drilling by hand. Demonstrate machine drilling. Discuss drills, drill grinding. Off Centre grinding faults and results of using a drill that has been ground off centre. Demonstrate drill grinding. Discuss the types of drills, various shanks etc. Discuss the drill chunck and M.T. sleeves. How pressure on the drill point offers greater resistance to "slip" with a M.T. shank. The use of "key" or "drift" to remove taper shank.	Discuss drilling, drill size, for various holes, push fit, clearance, tapping, reaming. (One hour). Continue with drills and drilling. Drill angles for various work, speeds and feeds, the use of coolants for various metals. Drill sharpening angle gauge. (One hour).
7.	Marking of for drilling, use of prick and centre punch. Chain drilling and cutting through with hacksaw. Drilling Cast Iron Drilling to-location *Note.*—all drilling during this period to be by hand drill.	F7-1 F7-2 F7-3 F7-4 F7-5 F7-6 F7-7 F7-8 F7-9 F7-10	Shop Talk or Demonstration. Discuss flat drill. Demonstrate use of prick and centre punch in connection with drilling, methods obtaining accuracy. Use of vice to hold work. Discuss H.S.S. and carban drills. Demonstrate use of dividers and Centre punch for making hole diameter register.	Drilling for screw threads. Sizes of drills, core diameter of male threaded portion, the types of thread cutting tapes, use of 1st, 2nd and plug tap. (One hour). Drilling for reaming, fitting dowel pins, location pins, Drilling and reaming

			Explain the reasons and need for this operation. Demonstrate using a drill ground off centre (ring register). Discuss the need for pilot drill with certain classes of work.	to fit taper pins. Drill size in relation to small end of taper pin, reaming allowance, reasons for fitting taper pins. How they must fit. (One Hour)
8.	Drilling using hand electric and pillar drill. Chain drilling by pillar drill. .. Sizes not below ¼″ .. Drilling and tapping through holes in mild steel plate. Assembling with the aid for bolts and nuts. Marking out and chain drilling Cutting through chain .. .. Drilled holes with hacksaw and chisel. File to propile .. .. .. Prepare work piece for machining to gauge limits (Pass work piece to Machinist Section).	F8-1 F8-2 F8-3 F8-4 F8-5 F8-6 F8-7 F8-8 F8-9 F8-10 F8-10A F8-10B F8-10.C F8-10.D F8-10.E F8-10.F F8-10.G	Demonstrate screw cutting drilled holes. Drill sizes, lubricant, ship breaking and clearing. Demonstrate use of taps in blind holes. Use of depth rule. Base of hole clearance methds of setting travel on drilling machine for depth of drilled hole.	Screw thread cutting in "blind" holes, the use of the plug tap. Check depth of hole, precautions when using taps in blind holes lubricant, clearing cips before inserting plug tap. (One Hour). Chain drilling, cutting through drilled holes with hacksaw and chisel on hammering plate or anvil. Precautions, angle of chisel. (One Hour).
9.	Drilling through two plates (Ex. No. F. 8) Reaming and fitting locating pins. Reaming and fitting taper pins. Drilling blind holes for fitting locating pins. Reaming for fit of pin in top plate.	F9-1 F9-2 F9-3 F9-4 F9-5 F9-6 F9-7 F9-8 F9-9 F9-10	Demonstrate reaming techniques. Demonstrate drilling through more than one plate. Methods of clamping work. Sefety precautions. Locate with undersize pin before drilling all holes to size. Fit of bolts in finished work	Further to the need for accuracy. Rule with calipers, then Micrometer. 0″ to 1″. Introduction to Micrometer, main parts, care when using. (One Hour). The principle on which a micrometer is designed. How accuracy is assured. How to read a micrometer. (One Hour).

Annexure IV—contd.

1	2	3	4	5
10.	Filling and finish work to close limits (Micrometer) Make male and female parts to fit using micrometer. Filling and finish work square and draw file faces. Drill grinding practice using mild steel blanks prepared by machine shop in conjunction with course grit wheels. (*Note* Mild steel should not be ground on the grinding machine reserved for tool grinding).	F10-1 F10-2 F10-3 F10-4 F10-5 F10-6	The use and care of grinding machine (D.E. Tool grinder). Safety precautions, use of water or coolant. Dry grinding, when to be used. Finish of ground tool. Cause of surface cracks in hardened tools.	Discuss angles and angle gauges. The use of fixed angle gauges. (One Hour) Discuss the protractor, its construction and uses. How to use in connection with marking out. (One Hour).
11.	Marking out with the use of scribing block angle plate and protractor. Cutting to line and filling to close limits. Male and female fits. Draw file finish.	F11-1 F11-2 F11-3 F11-4 F11-5 F11-6	Demonstrate smooth and draw filing, discuss the need for draw filing. Demonstrate the use of radius gauges. Demonstrate flate scraping.	Various methods of finishing the work piece. Filing, rough, smooth, and draw filing. Scraping for a finish, melting or fresting surfaces. (One Hour). Discuss the height gauge, its construction and uses. (One Hour).
12.	Marking out to close limits with height gauge, angle plate and surface plate. Scraping flat surfaces. Scraping to fit, male and female parts.	F12-1 F12-2 F12-3 F12-4 F12-5 F12-6	Shop talk or Demonstration. (1) Demonstrate the use of Flat scraper, Safety precautions. (2) Marking surfaces with prussian blue, Show high sports, methods of removing. Sharpening flat scrapers.	(1) Discuss clearances and fits. Male and female running and sliding parts. Degree of finish lubrication clearance (One Hour). (2) Further to fits, limits and allowance 1" pin & 1" hole).

				Tolerances, what they mean why they are allowed and shown on the drawing. Workshop inaccuracies (One Hour).
13	Precision filing, marking out, spacing and drilling poles to close limits. Assembling by bolting together Drilling taping and fitting studs in mild steel. Repeat with cast iron.	F13-1 F13-2 F13-3 F13-4 F13-5 F13-6 F13-7 F13-8	The use of vernior height gauge when marking out for precision drilling. Stud driving, the use of a stud box, precautions. With-drawing studs, precautions, use of correct tools. The use of box or tubular spanners to ensure pressure is not applied against one side of stud when nuts or stud box and nut is used to withdraw studs.	Cutting external threads with hand dies. Types of dies, split, circular adjust a solid and die nut (clearing threads). Die holders, for above dies, how to fit and use a die and die holder. Lubricant and chip breaking. Lead in side of dies Size holder in relation to size of die and thread to be cut. Depth of cut on first operation. Two Lectures, (One Hour each).
14.	Make and assemble a knuckle joint to close limits and free joint. (*Note*—Hinge pin to be prepared in Centre Lathe section and to be standard size for reaming). Practice with a half round scraper on soft metal bearings. (Shaft or mandril to be prepared in Centre Lathe or grinding section.	F14-1 or F14-2 or F14-3	Shop talk or demonstration. Demonstrate the use of half round scraper. Demonstrate fitting shaft to bearing. The use of marking blue. Sharpening a half round scraper. Grindstone and slip stone. Discuss bearing clearances and lubrication.	The various methods of securing components by nut and bolt, set screw etc. Cheese head and counter sink bolts, where used, method of "locking". (One Hour) Methods of locking ordinary nut and where the various methods are employed subject to vibration etc. (One Hour). *moving parts, revolving parts in
15.	Drilling and countersinking to fit countersink bolts. Use of rose or counter-sink bit. The use of counter bore tool to fit cheese head bolts.	F15-1 F15-2 F15-3 F15-4 F15-5	Countersinking, points to watch, depth, angle, full bearing or C/S portion etc. Demonstrate using b/s tools.	The machine tools usually found in a fitting workshop. Drilling m/c, Grinding M/c, Press etc.,

Annexure IV—concld.

1	2	3	4	5
	(*Test*)—Mark out, drill and counter bore two separate plates. Plate No. 1 to FT-3 be given to instructor before work is started on Plate No. 2.		Discuss counter-boring to take cheese head bolts. Demonstrate counterboring. Precautions to be taken etc.	How to use them, care and upkeep (maintenance) safety precautions, Common faults when using them Holding work piece by hand when drilling, wrong drill speed for work piece, no lubricant or coolant, applying coolant with rag or waste, drill not correctly ground. Not wearing goggles or seeing that visor is in position when using grinding machine, work rest not correctly.
	Assemble plates by fitting correct bolts.			Two lectures, (One Hour each).
				Set grinding on the side of the wheel grinding mild steel or non-ferrous metals on wheels suitable only for High Speed Steel tools drills etc., adjusting work piece when press in motion, not using guards etc.

DWG. No. F 1-1

IF IN DOUBT, ASK

MATERIAL:- M.S. 3½" x 3½" x ½"

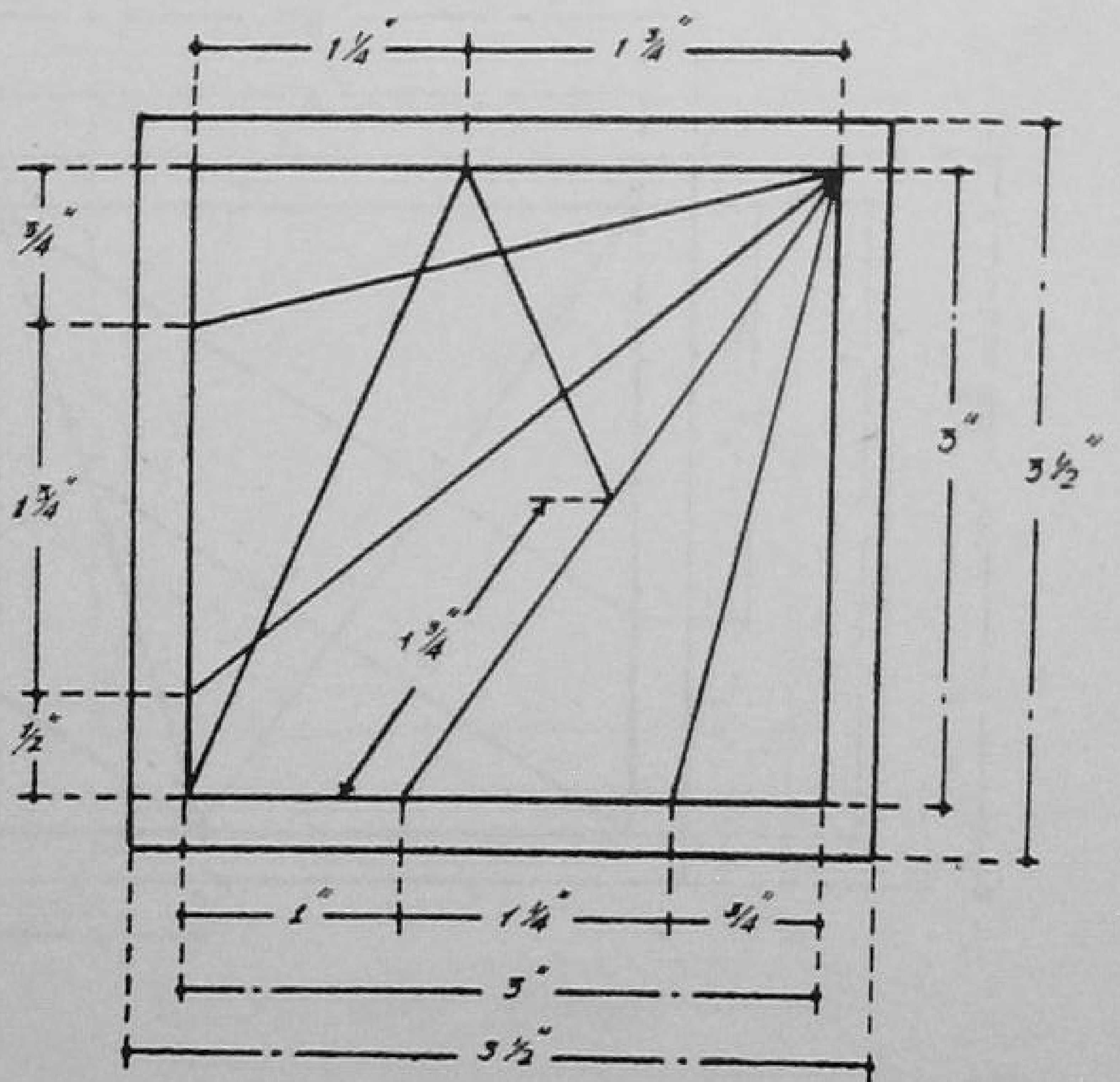

(Do not Scale Drawing)

Clean face
mark out as drawing
using Rule and Scriber

Work piece to be kept
for future exercise

D. G. R. & E. MIN. of LAB. & EMPT	
TRADE:	FITTER Ex:- 1.
TRACED BY:	R. P. Sharma
CHECKED BY:	Gulab 67.

Scale: 1:1

Issued By: Ministry of Community Development & Co-op.

DWG. No. F 1-2

IF IN DOUBT, ASK

MATERIAL: M.S. 3½" × 3½" × ¼"

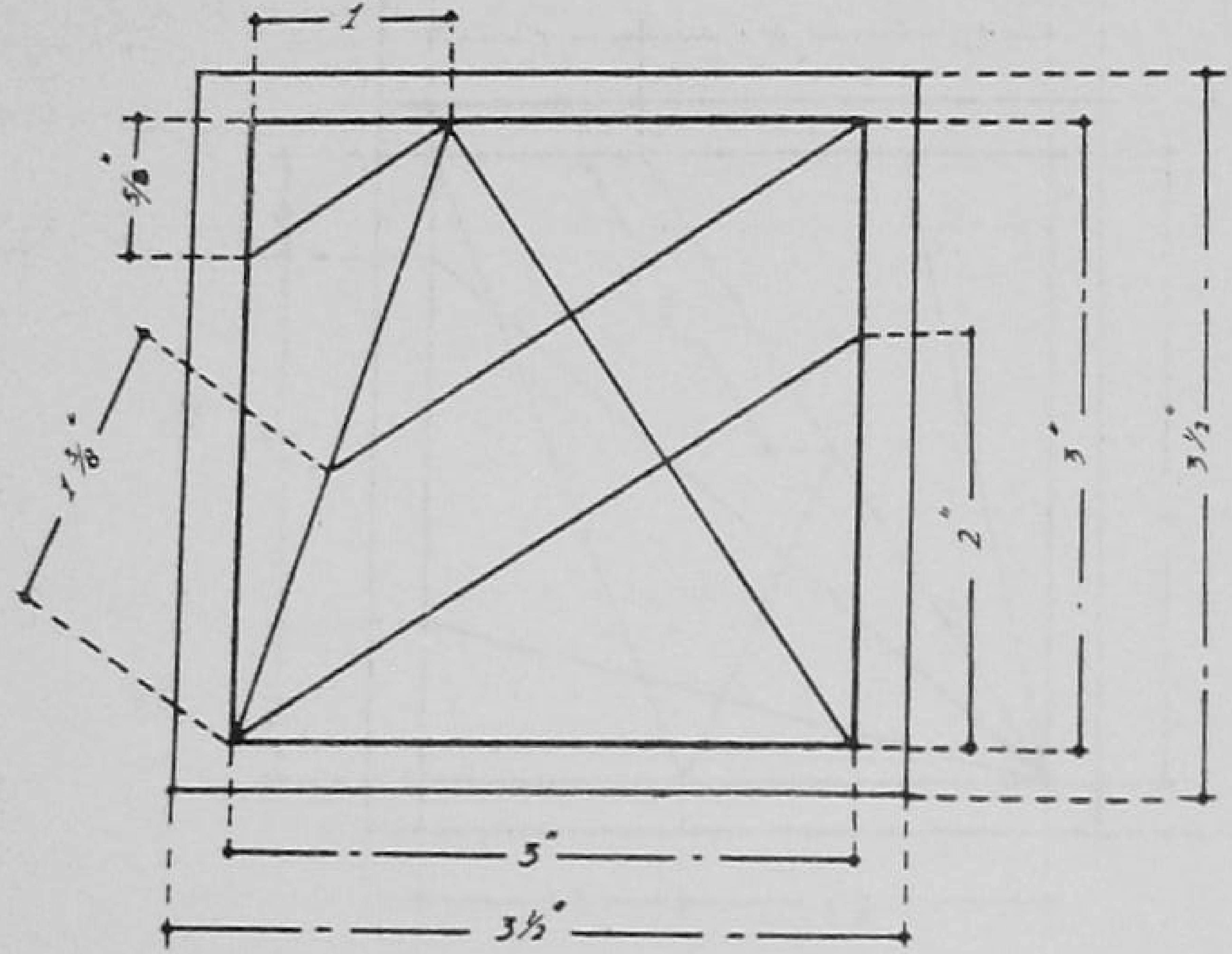

Clean face
mark out as drawing
using Rule and Scriber

Work piece to be
kept for future exercise

(Do not Scale Drawing)

D.G.R.& E. Min. of LAB.& EMPT.
TRADE :- FITTER Ex. 2
TRACED BY: R. P. Sharma
CHECKED BY: Gulab 6.7.6'

Scale: 1:1

Issued by: Ministry of Community Development & Co-op.

DWG No. F 1-3

IF IN DOUBT, ASK

MATERIAL: M.S. 3½" × 3½" × ¼"

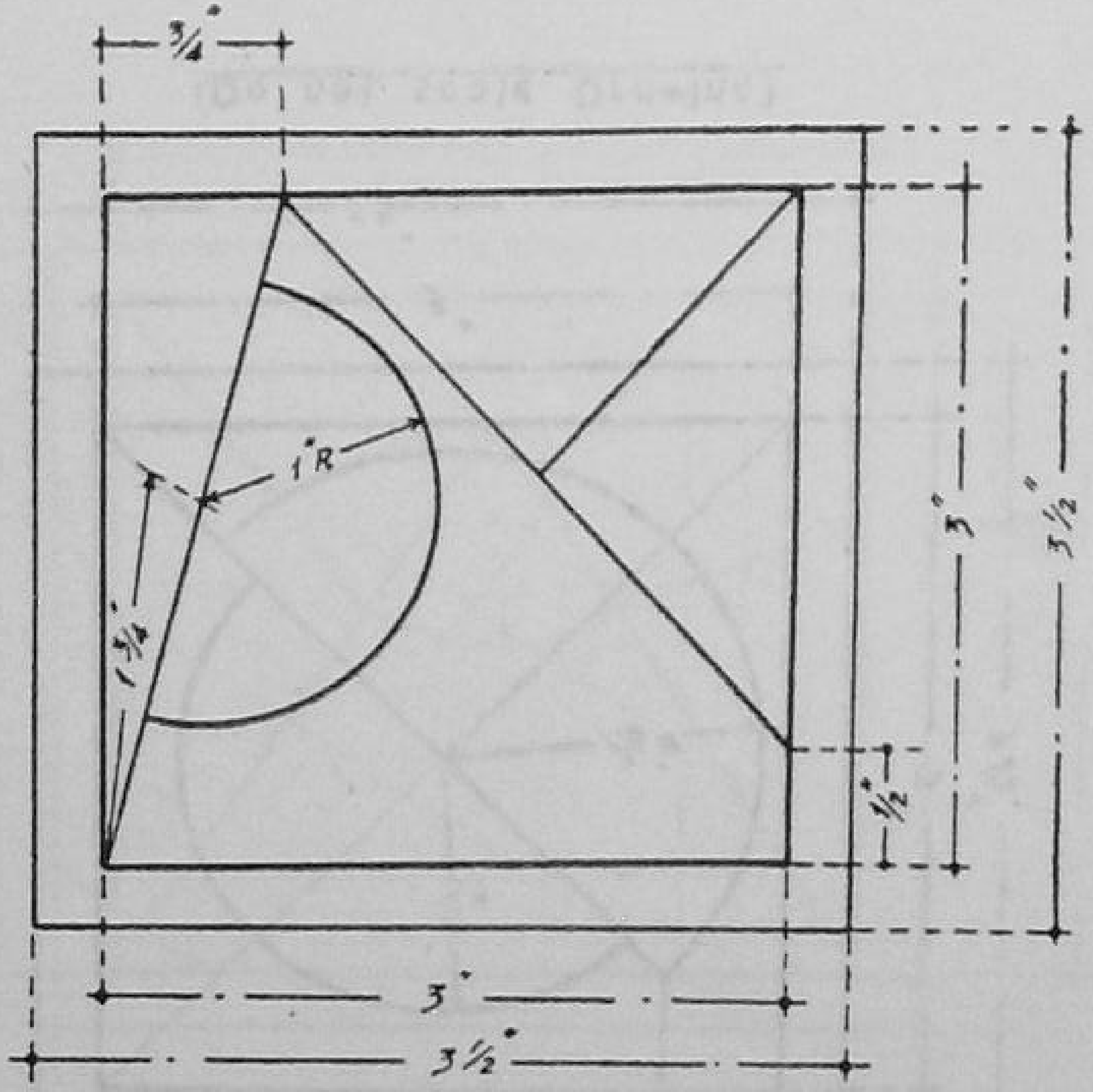

(Do not scale Drawing)

Clean face
mark out as drawing
using Rule and Scriber

Work piece to be kept
for future exercise

D.G.R.& E. Min. of LAB. & EMPT.	
TRADE:	FITTER Ex:- 3
TRACED BY:	R. P. Sharma
CHECKED BY:	[signature] 5.7.60

Scale: 1:1

Issued by: Ministry of Community Development & Co-op.

DWG. No. F 1-4

IF IN DOUBT, ASK

MATERIAL: M.S. 3½" × 3½" × ¼"

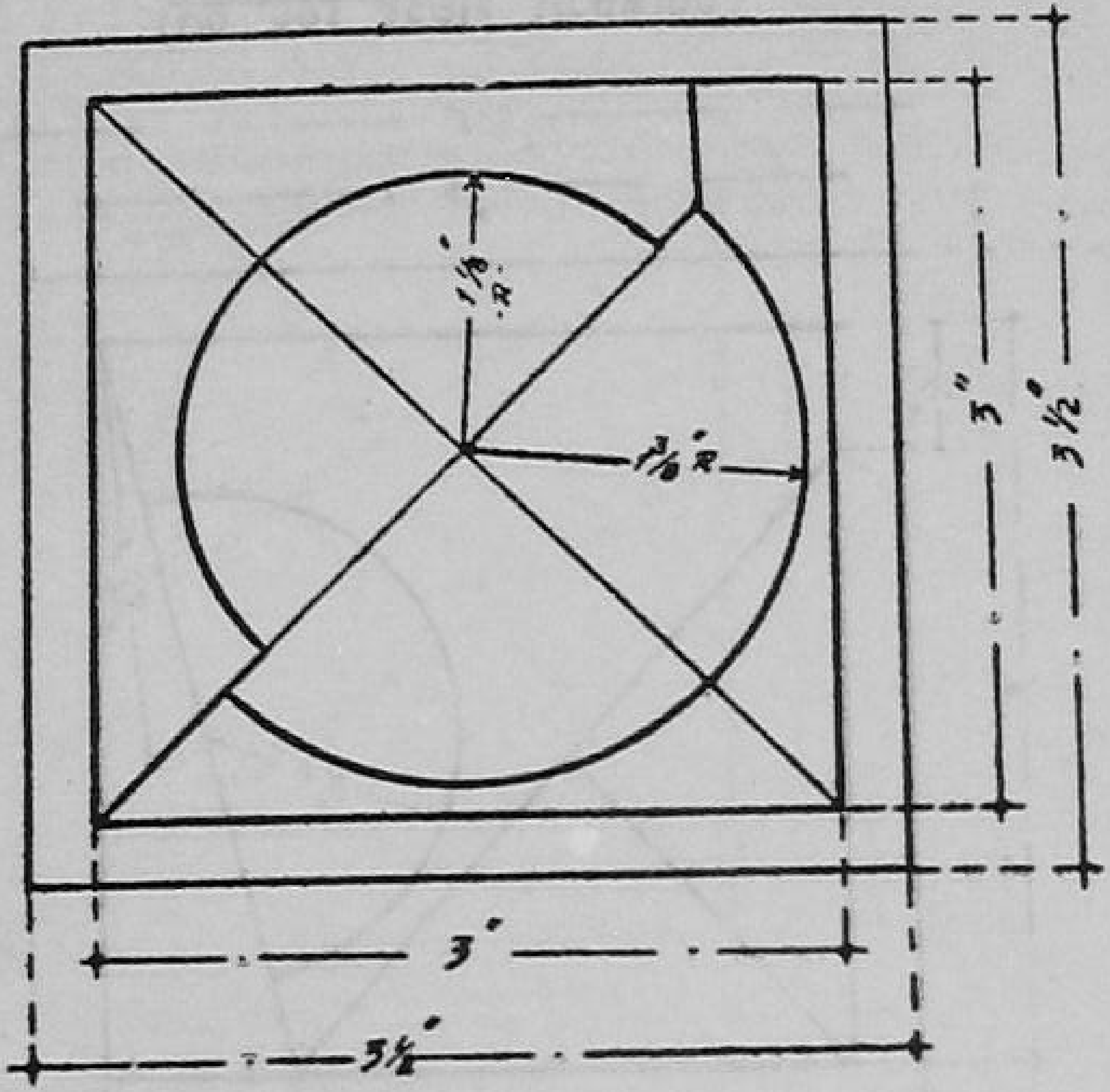

Clean face
mark out as drawing
using Rule and Scriber

Work piece to be kept
for future exercise

(Do not scale Drawing)

D.G.R.& E. Min. of LAB. & EMPT.	
TRADE:	FITTER Ex: 4.
TRACED BY:	R. A. Sharma
CHECKED BY:	Gulab

Scale: 1:1

Issued By: Ministry of Community Development & Co-op.

DWG. No. F 1-5

IF IN DOUBT, ASK

MATERIAL M.S. 3½" × 3½" × ¼"

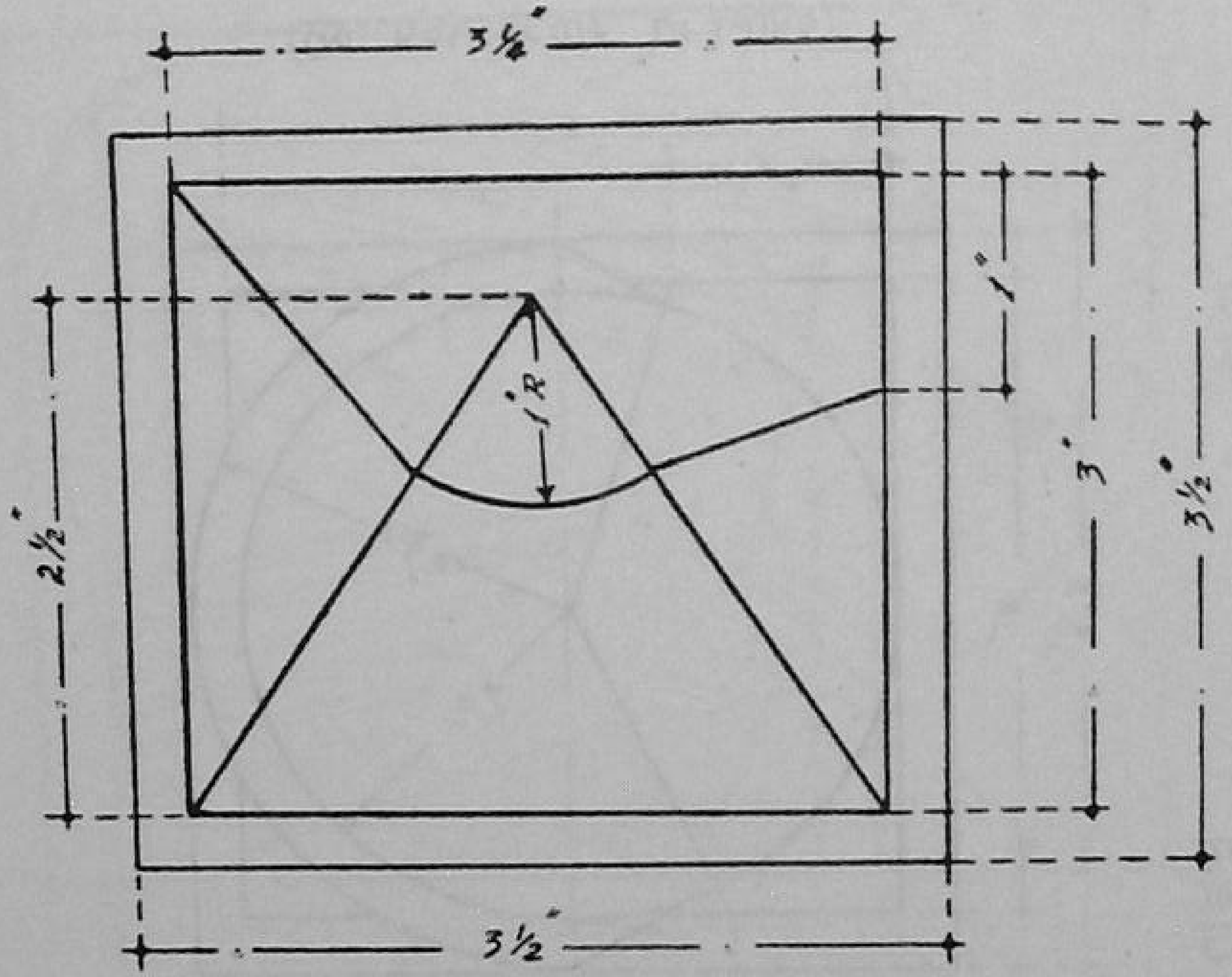

Clean face
mark out as drawing
using Rule and Scriber

Work to be kept for
future exercise

(Do not scale Drawing)

D.G.R.&E. Min.of LAB.&EMPT.	
TRADE: FITTER	EX: 5.
TRACED BY	R.P. Sharma
CHECKED BY	Gulab

Scale: 1:1

Issued by: 'Ministry of Community Development & Co.op

DWG No F 1-6 | **IF IN DOUBT, ASK** | MATERIAL M.S. 3½" × 3½" × ¼"

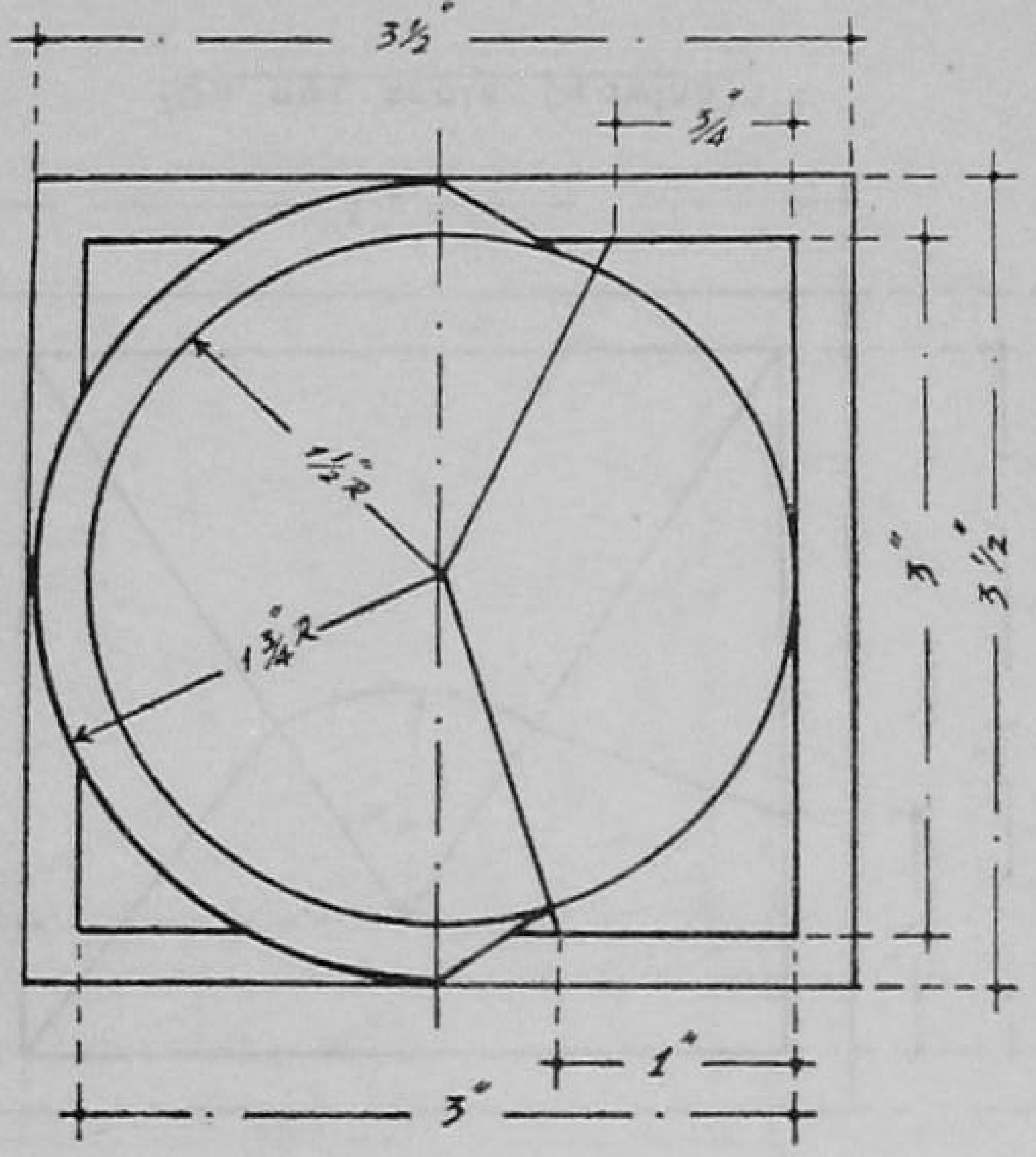

Clean face
mark out as drawing
using Rule and Scriber.

Work piece to be kept
for future exercise

(Do not scale Drawing)

D.G.R.& E. Min. of LAB.& EMPT.

TRADE: FITTER Ex: 6.

TRACED BY: S. D. Sharma

CHECKED BY: Gulati

Scale: 1:1

Issued by Ministry of Community Development & Co-op

DWG. No. F 1-7

IF IN DOUBT, ASK

MATERIAL: M.S. 4" × 4" × 1/4"

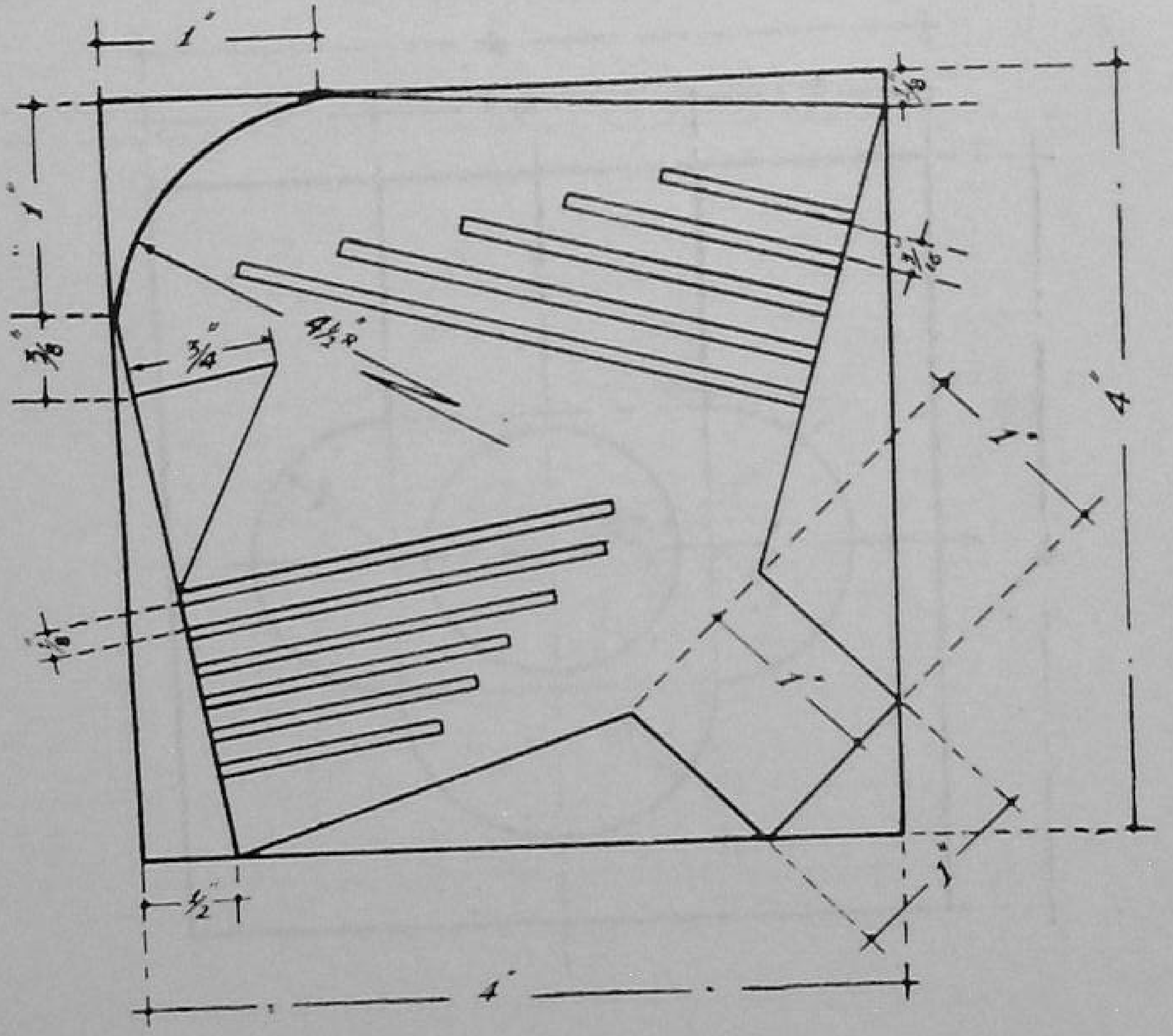

Mark out only.

To be used for
Ex: F 3-1

(Do not scale Drawing)

D.G.R.&E. Min. of LAB. & EMPT.	
TRADE FITTER	Ex: 7
TRACED BY:	R. P. Sharma
CHECKED BY:	Gulati 61

Scale :- 1:1

Issued by: Ministry of Community Development & Co-op.

DWG. No F1-8

IF IN DOUBT, ASK

MATERIAL 4" × 4" × 1/4"

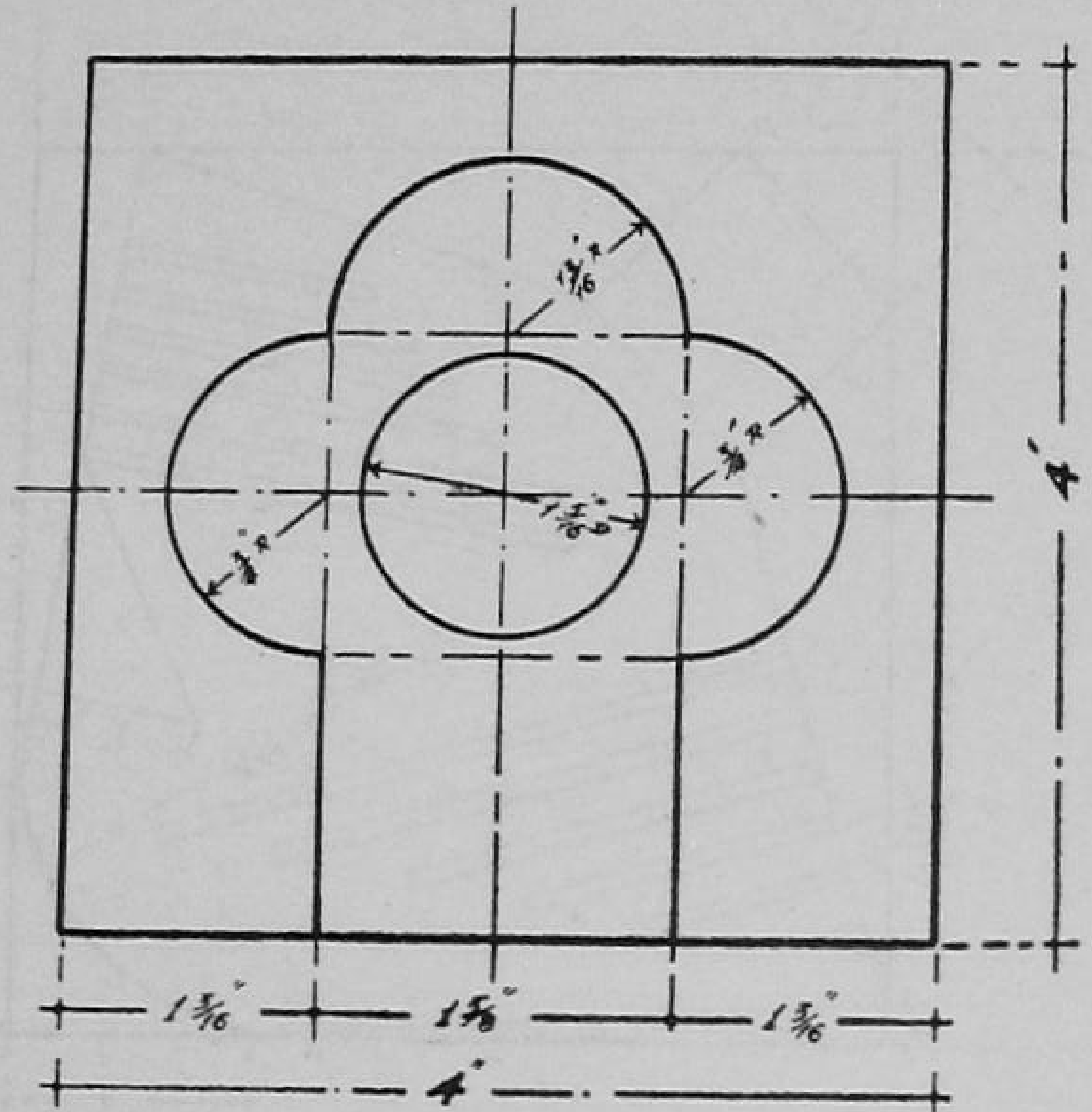

Mark out only.

Leave Register marks for cutting to profile.

(Do not scale Drawing)

Scale: 1:1

Issued by: Ministry of Community Development & Co-op.

D.G.R.&E. Min. of LAB. & EMPT.	
TRADE:	FITTER. Ex: 8.
TRACED BY:	R. P. Sharma
CHECKED BY:	G Ulah.

DWG. No. F 1-9

IF IN DOUBT, ASK

MATERIAL- M.S. 4" × 4" × 1/4"

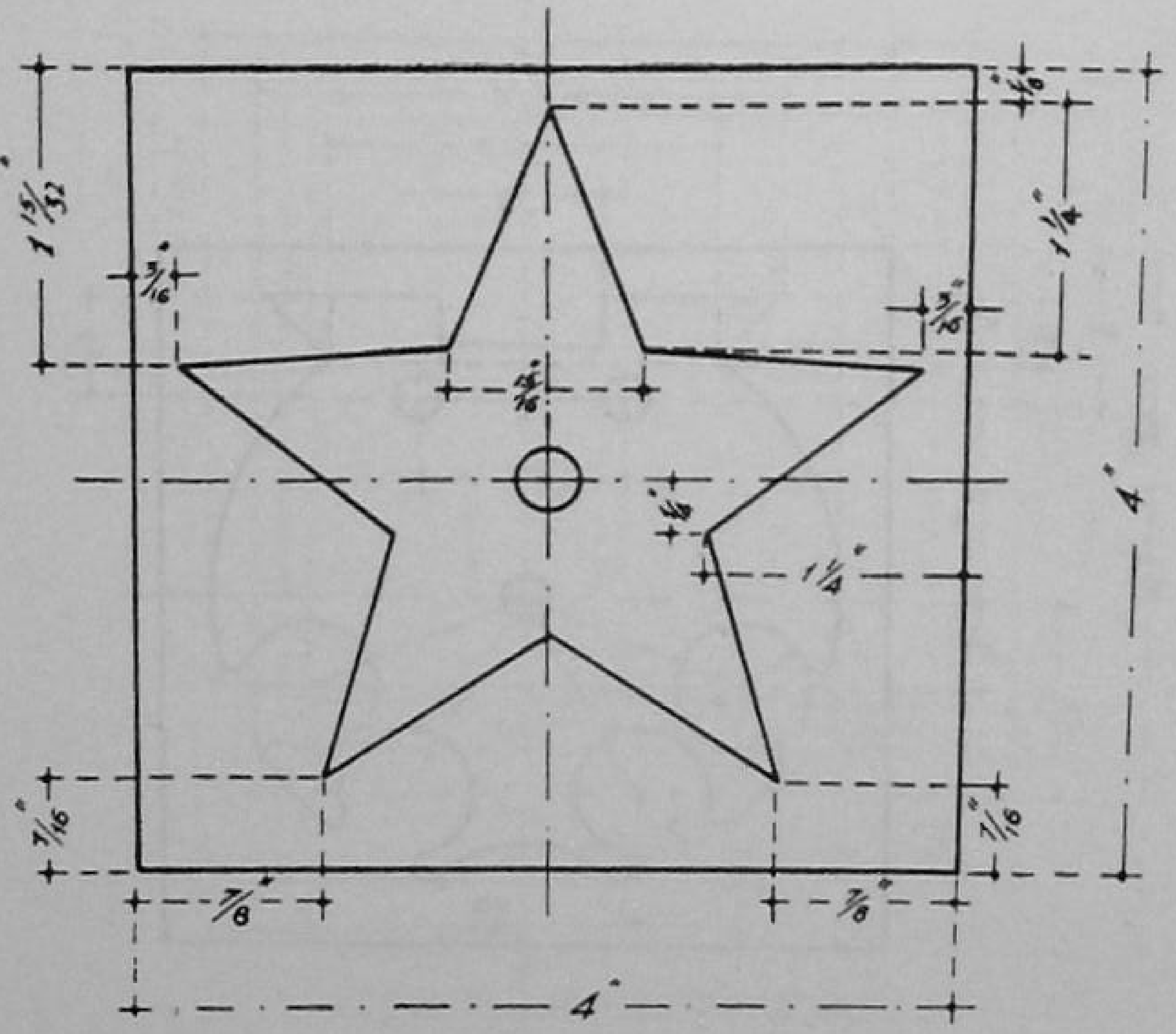

Mark out only.

Leave Register Marks for cutting to Profile.

NOTE:

To be used for later Exercise.

(Do not scale Drawing)

D.G.R.& E. Min. of LAB.& EMPT
TRADE: FITTER Ex: 9.
TRACED BY: R. P. Sharma
CHECKED BY: Gulab 6.7.6

Scale 1:1

- Issued by: Ministry of Community Development & Co-op.

DWG. No. F1-10 | IF IN DOUBT, ASK | MATERIAL: M.S. 3½" × 3½" × ¼"

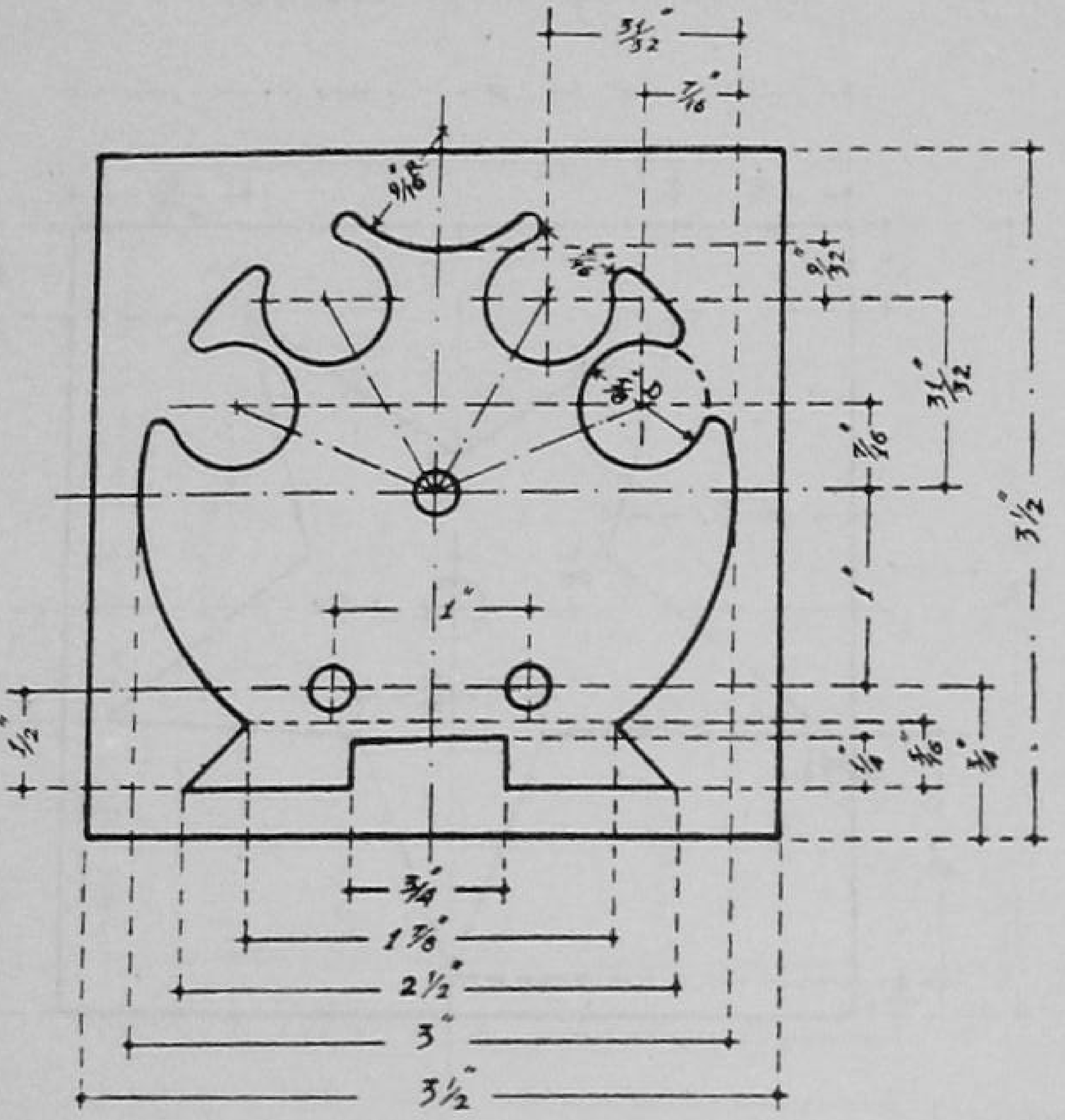

Mark out only.

Leave Register marks for cutting to profile

(Do not scale Drawing)

D.G.R.& E. Min. of LAB. & EMPT.
TRADE: FITTER Ex: 10.
TRACED BY: R. P. Sharma
CHECKED BY: Gulab 6.7.60

Scale: 1:1

Issued by: Ministry of Community Development & Co-op.

DWG. No. F 2-1

Use Exercise F1-1

IF IN DOUBT, ASK

MATERIAL M.S. 3½" × 3½" × ¼"

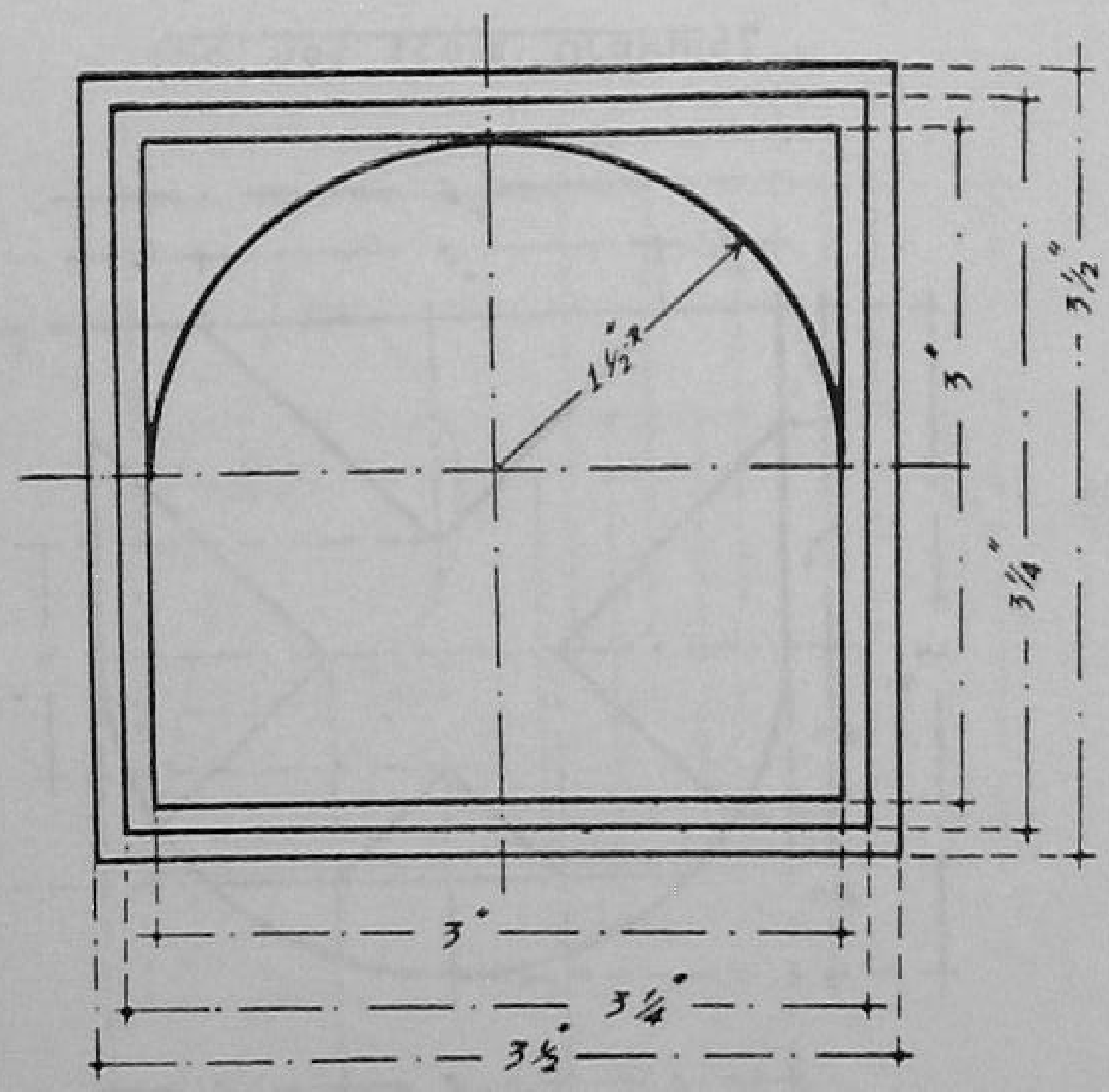

(Do not scale Drawing)

Part-1
Clean up workpiece scribe lines as Drawing and reduce to 3" square by use of Chisel and Hammer.

Part-2
Locate centre of 3" square describe a semicircle and cut to line with Chisel.

D.G.R.& E. Min. of LAB.& EMPT.

TRADE:- FITTER Ex 11

TRACED BY: R D Sharma

CHECKED BY:

DWG. No. F-2-2

IF IN DOUBT, ASK

Use Exercise F.2-1.

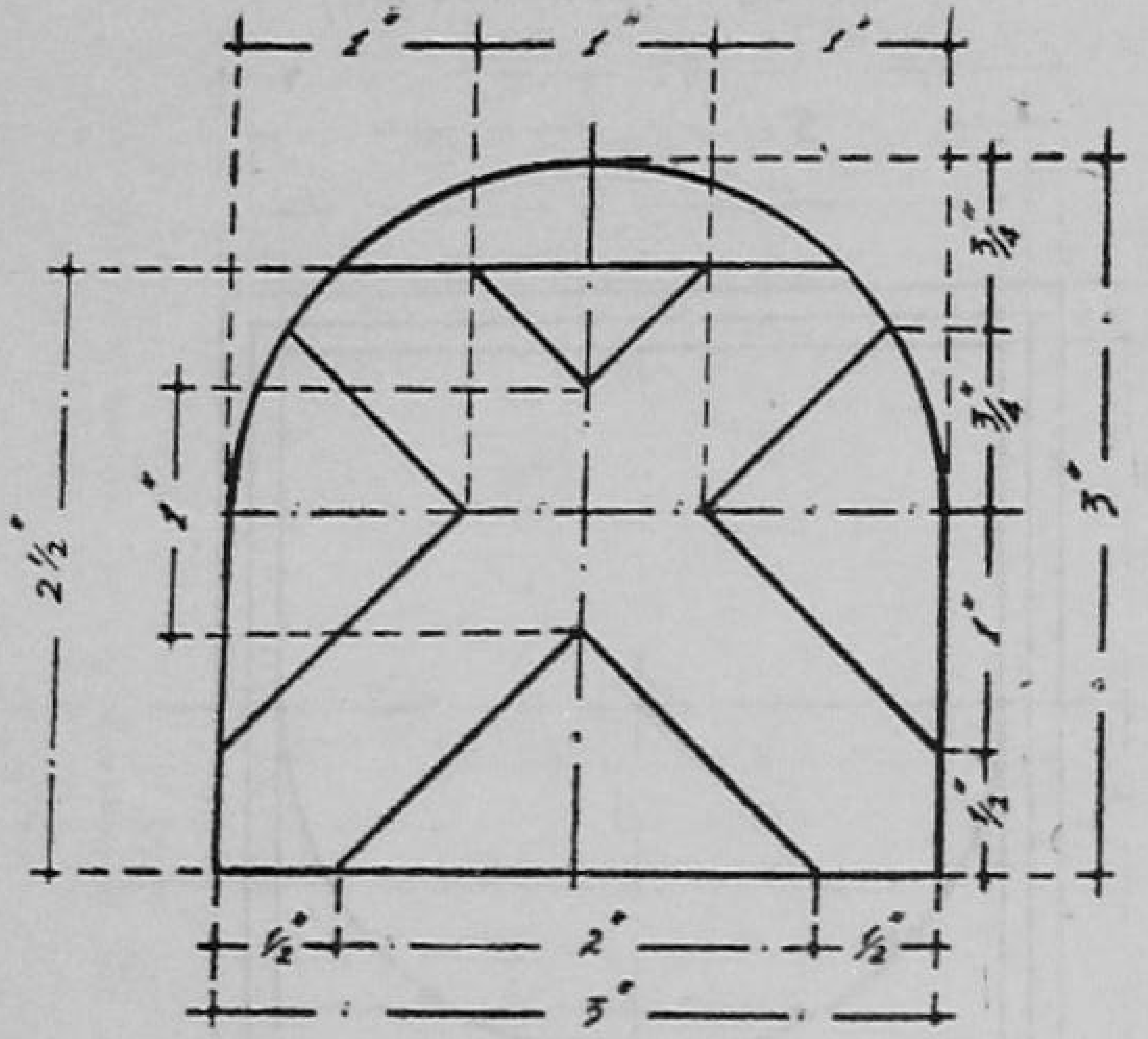

Mark out and cut to line with Hacksaw.

(Do not scale Drawing)

D.G.R.& E. Min. of LAB. & EMPT.	
TRADE: FITTER	Ex: 12.
TRACED BY:	R.P. Sharma
CHECKED BY:	Gulab 6.7.59

Scale:- 1:1

Issued by: Ministry of Community Development & Co-op.

DWG No. F 2-3

IF IN DOUBT, ASK

Use Exercise F 1-3.

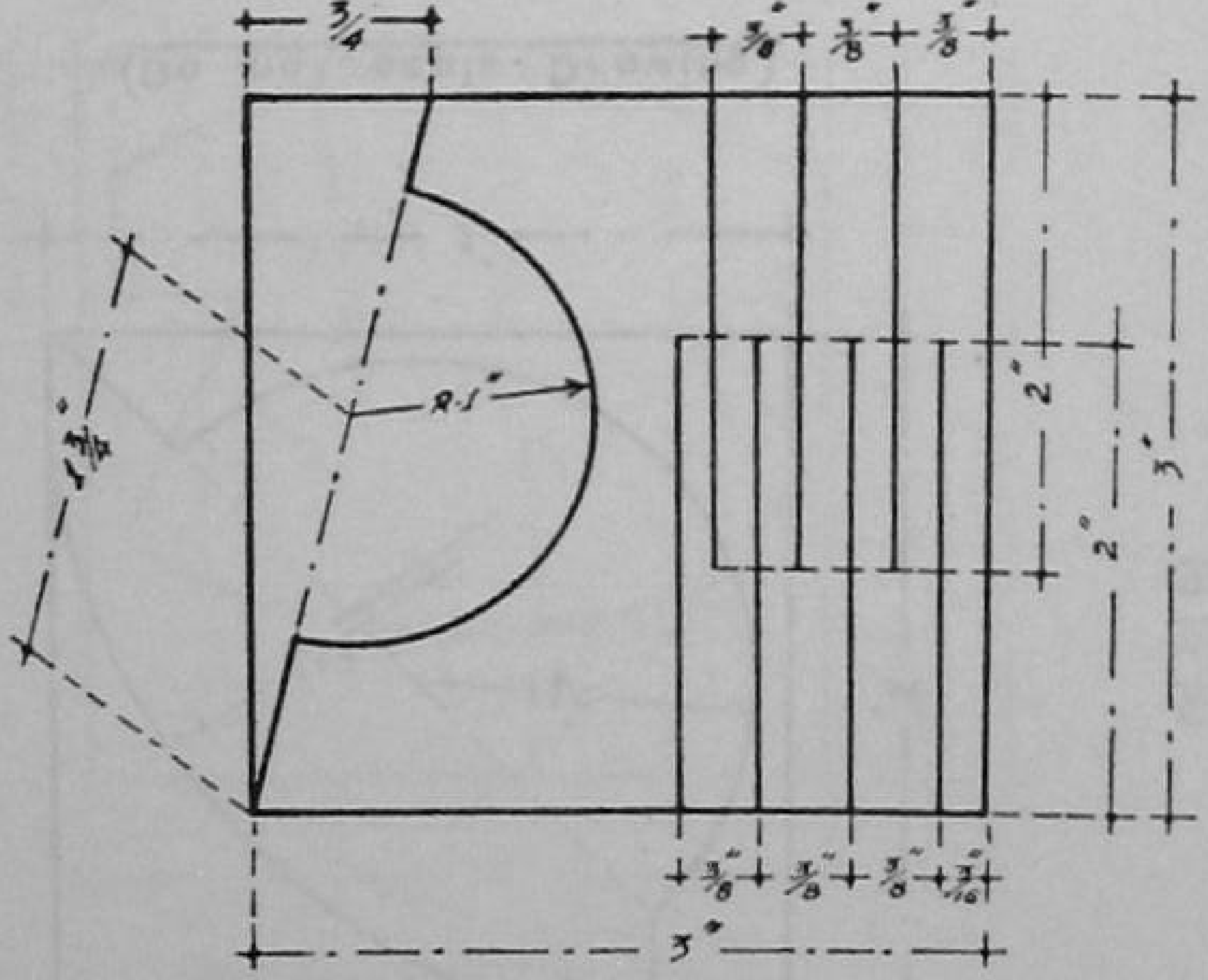

Complete marking out and cut to straight line with Hacksaw and curved line with Chisel.

(Do not scale Drawing)

D.G.R.& E. Min. of LAB.& EMPT.	
TRADE:	FITTER. Ex:- 13.
TRACED BY:	R. P. Sharma
CHECKED BY:	6.7.60

Scale. 1:1

Issued by: Ministry of Community Development & Co-op.

DWG. No. F 2-4

IF IN DOUBT, ASK

Use Exercise:- F 1-4.

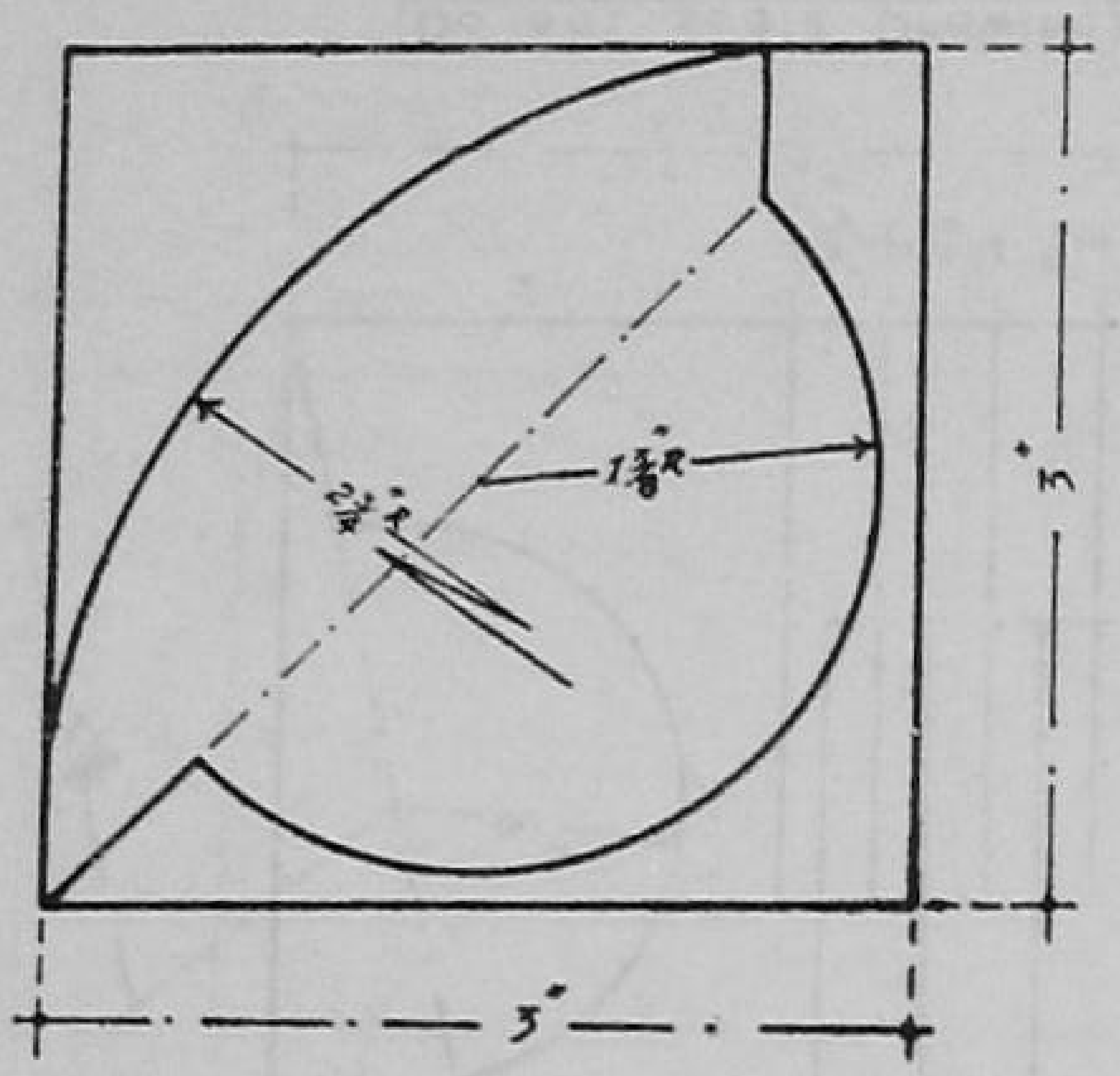

(Do not scale Drawing)

Complete marking out and cut to line with Hacksaw and Chisel.

D.G.R.& E. Min. of LAB.& EMPT.	
TRADE: FITTER	Ex: 14.
TRACED BY:	R. P. Sharma
CHECKED BY:	[signature] 6.7.

Scale:- 1:1

Issued by: Ministry of Community Development & Co-op.

DWG. No. F 2-5

IF IN DOUBT, ASK

Use Exercise: F 1-5

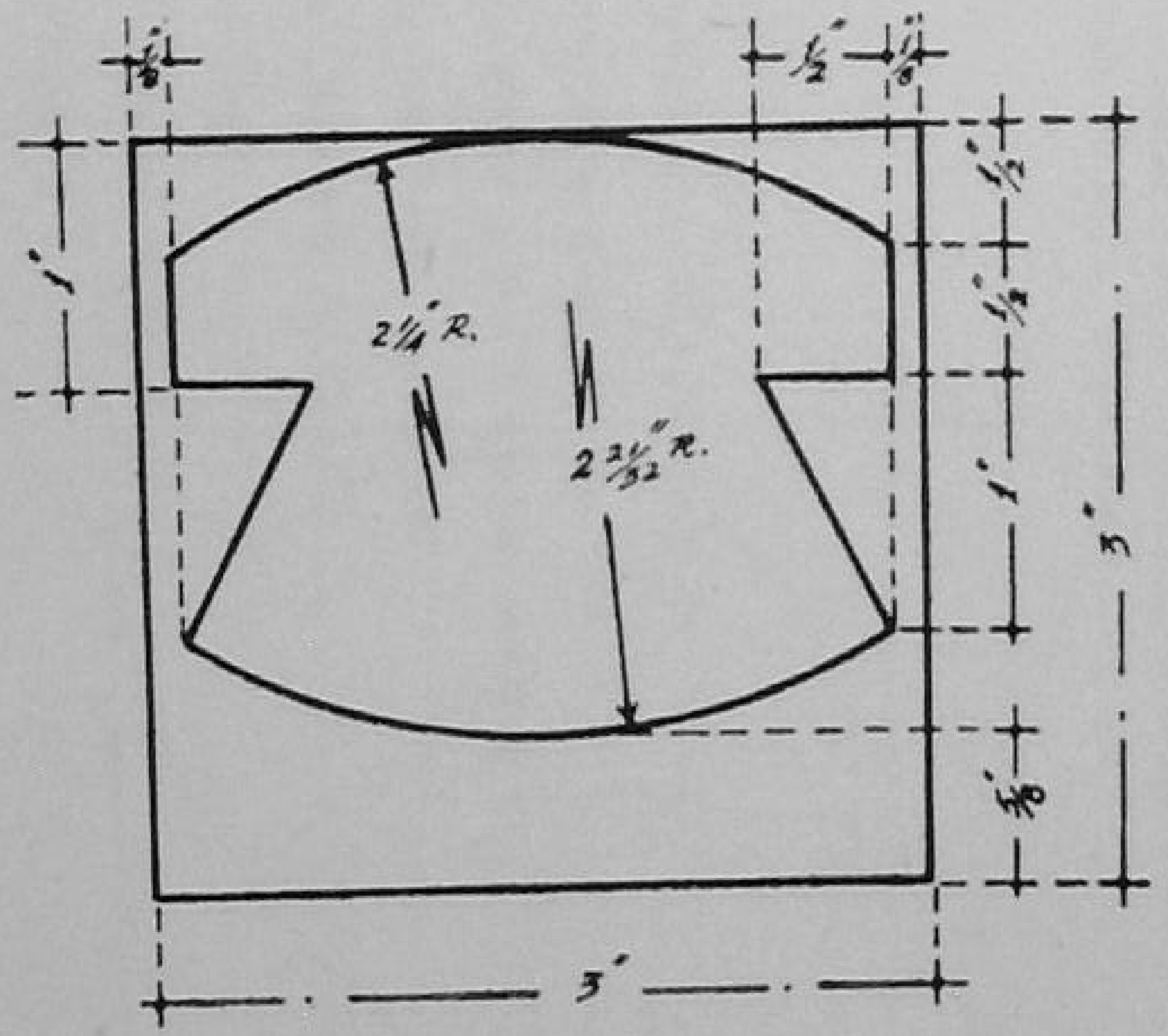

(Do not scale Drawing)

- Clean surface and mark out.

Cut out figure with Hacksaw and Chisel.

D.G.R.&E. Min. of LAB.&EMPT.
TRADE: FITTER. Ex: 15.
TRACED BY: R. P. Sharma
CHECKED BY: Gulab 6-7-60

Scale: 1:1

Issued by: Ministry of Community Development & Co-op.

Annexure V

Approximate estimate of expenditure for running a cluster-type of training Institute with 4 trades with hostel accommodation during the 1st year.

	Rs.
Non-Recurring—	
A. Accommodation (details at page enclosed)	80,000
B. Tools & equipment	
(i) Blacksmithy	10,000
(ii) Carpentry	8,000
(iii) Leather works	6,000
(iv) Mat weaving	1,000
(v) Installation cost including transport etc.	1,000
C. Furniture :	
For Institute at Rs. 75 per seat the total will be	4,500
For Hostel at Rs. 50 per seat	2,000
TOTAL ..	1,12,500
or Rs.	1·13 lakhs
Recurring—	
(A) *Pay of Staff—*	
(i) One Superintendent incharge @ Rs. 250 ×12 P.M.	3,000
(ii) 4 Instructors @Rs. 125 p.m. each ×12	6,000
(iii) One Office Assistant-*cum*-Accountant @ Rs. 125 p.m. ×12 ..	1,500
(iv) One Store-keeper @125 ×12	1,500
(v) One Darwan @ Rs. 50×12	600
(vi) One Peon Rs. 50×12	600
(vii) One sweeper @ 50×12	600
(B) *Raw materials—*	
(i) Carpentry, (ii) Blacksmithy, (iii) Leather works, (iv) Mat weaving } (Taking of the average cost at Rs. 15 per seat per month, the total for 60 seats per year ..	10,800
(C) *Stipends—*	
(i) 40 trainees @ Rs. 30 each p.m. residing in hostels, (ii) 20 trainees @ Rs. 20 each }	19,200
(D) *Contingencies etc.* Incld. sports, medical aid etc.	2,000
TOTAL ..	45,000
or Rs.	46,000
GRAND TOTAL ..	1·59 lakhs

Estimates of expenditure of construction of the Institute and hostel

A. Institute—

		sq. ft.
1.	Carpentry workshop	800
2.	Blacksmithy workshop	800
3.	Leather works	500
4.	Mat weaving	600
5.	Class room (one)	600
6.	Two store-rooms for finished products and raw materials	400
7.	Superintendent's room	160
8.	General staff room	160
9.	Office room	160
10.	Latrine, urinals etc.	400
	TOTAL	4,580 or 4,600 sq. ft.

Cost @ Rs. 8 per sq. ft. will be = Rs. 36,800 or 37,000

B. Hostel accommodation for 40 trainees—

1.	2,400 sq. ft. ×8	19,200
2.	Kitchen & dining room 600 sq. ft. ×8	4,800
3.	Latrine & urinals 200 sq. ft. ×6	1,200
4.	Verandah of the hostel 800 sq. ft. ×Rs. 5/-	4,000
5.	Tube well with storage tanks	8,000
	TOTAL	37,200 or Rs. 37,000

C. Cost of land—	5,000
TOTAL OF A., B. & C.	79,000 or 80,000 approx.

Trade for Institutional training with Extension wings and Peripatetic training.

A. Trades for Institutional training with extension wings—

1. Carpentry including polishing and painting as related to carpentry.
2. Blacksmithy including tin-smithy and sheet metal works.
3. General fitter.
4. Leather goods manufacture.
5. Masonry.
6. Soap making from non-edible oils.
7. Village pottery including clay doll making.
8. Wool spinning & weaving (Khadi).
9. Hand made paper.

10. Tailoring-*cum*-embroidery & cloth doll making.
11. Mat making.
12. Cane & bamboo works.
13. Dyeing & printing of cloth.
14. Wooden toys & allied crafts (lacqure ware).
15. Fibre industry including brush making.
16. Bakery & confectionery.
17. Fruits & vegetable preservation.
18. Hosiery & hand knitting.
19. Tanning of leather.
20. Khadi cotton spinning including Ambar Charkha & khadi weaving.

B. Peripatetic or mobile training units—

1. Bee keeping
2. Palm gur making.
3. Gur & khandsari.
4. Hand pounding of paddy and processing of other cereals.
5. Bricks & tiles making.
6. Flaying & bone digesting.
7. Village ghani oil.

(19 under A and number 6 under B are part of one trade divided for the purpose of training).

LICD&C—5,000—10-10-60—GIPF.

PRINTED IN INDIA BY THE MANAGER, GOVERNMENT OF INDIA PRESS,
FARIDABAD, 1960.